KOMPETENZZENTRUM WasserBerlin

REPORT

Cicerostr. 24
D-10709 Berlin
Germany
Tel +49 (0)30 536 53 800
Fax +49 (0)30 536 53 888
www.kompetenz-wasser.de

River water quality modelling: Status quo

Project acronym: SAM-CSO

by

Andreas Matzinger

Kompetenzzentrum Wasser Berlin gGmbH

for

Kompetenzzentrum Wasser Berlin gGmbH

Preparation of this report was financed in part through funds provided by

Berlin, Germany

2009

© Copyright 2009 by the KompetenzZentrum Wasser Berlin gGmbH. All rights including translation into other languages, reserved under the Universal Copyright Convention, the Berne Convention or the Protection of Literacy and Artistic Works, and the International and Pan American Copyright Conventions.

Important Legal Notice

Disclaimer: The information in this publication was considered technically sound by the consensus of persons engaged in the development and approval of the document at the time it was developed. KWB disclaims liability to the full extent for any personal injury, property, or other damages of any nature whatsoever, whether special, indirect, consequential, or compensatory, directly or indirectly resulting from the publication, use of application, or reliance on this document. KWB disclaims and makes no guaranty or warranty, expressed or implied, as to the accuracy or completeness of any information published herein. It is expressly pointed out that the information and results given in this publication may be out of date due to subsequent modifications. In addition, KWB disclaims and makes no warranty that the information in this document will fulfill any of your particular purposes or needs. The disclaimer on hand neither seeks to restrict nor to exclude KWB's liability against all relevant national statutory provisions.

Wichtiger rechtlicher Hinweis

Haftungsausschluss Die in dieser Publikation bereitgestellte Information wurde zum Zeitpunkt der Erstellung im Konsens mit den bei Entwicklung und Anfertigung des Dokumentes beteiligten Personen als technisch einwandfrei befunden. KWB schließt vollumfänglich die Haftung für jegliche Personen-, Sach- oder sonstige Schäden aus, ungeachtet ob diese speziell, indirekt, nachfolgend oder kompensatorisch, mittelbar oder unmittelbar sind oder direkt oder indirekt von dieser Publikation, einer Anwendung oder dem Vertrauen in dieses Dokument herrühren. KWB übernimmt keine Garantie und macht keine Zusicherungen ausdrücklicher oder stillschweigender Art bezüglich der Richtigkeit oder Vollständigkeit jeglicher Information hierin. Es wird ausdrücklich darauf hingewiesen, dass die in der Publikation gegebenen Informationen und Ergebnisse aufgrund nachfolgender Änderungen nicht mehr aktuell sein können. Weiterhin lehnt KWB die Haftung ab und übernimmt keine Garantie, dass die in diesem Dokument enthaltenen Informationen der Erfüllung Ihrer besonderen Zwecke oder Ansprüche dienlich sind. Mit der vorliegenden Haftungsausschlussklausel wird weder bezweckt, die Haftung der KWB entgegen den einschlägigen nationalen Rechtsvorschriften einzuschränken noch sie in Fällen auszuschließen, in denen ein Ausschluss nach diesen Rechtsvorschriften nicht möglich ist.

Colophon

Title

River water quality modelling: Status quo

Authors

Andreas Matzinger, Kompetenzzentrum Wasser Berlin gGmbH

Quality Assurance

Kai Schroeder, Kompetenzzentrum Wasser Berlin gGmbH

Jan Köhler, Leibniz Institute of Freshwater Ecology and Inland Fisheries (IGB), Berlin, Germany

Publication / Dissemination approved by technical committee members:

Christelle Pagotto, Veolia Eau

Cyrille Lemoine, Veolia Environnement Recherche & Innovation

Matthias Rehfeld-Klein, Senatsverwaltung für Gesundheit Umwelt und Verbraucherschutz Berlin

Dörthe von Seggern, Senatsverwaltung für Gesundheit Umwelt und Verbraucherschutz Berlin

Regina Gnirß, Berliner Wasserbetriebe

Kay Joswig, Berliner Wasserbetriebe

Erika Pawlowsky-Reusing, Berliner Wasserbetriebe

Nicolas Rampnoux, Veolia Environnement Recherche & Innovation

Emmanuel Soyeux, Veolia Environnement Recherche & Innovation

Yann Moreau-Le Golvan, Kompetenzzentrum Wasser Berlin gGmbH

Deliverable number

D 4

Abstract

Freshwater ecosystems are based on complex interactions of biogeochemical processes, i.e. physical (e.g., mixing, gas exchange), geochemical (e.g., nutrient recycling, oxygen consumption) and biological (e.g., algae growth, microbiologically catalysed chemical reactions) processes. Since the 1980s, water quality models have been used to better understand or untangle these processes and to make predictions on future development of lakes and rivers. Today water quality models have become important management tools for a variety of applied surface water issues.

In the KWB project SAM-CSO, water quality modelling is planned to be used to simulate the impacts of combined sewer overflows (CSO) on the River Spree. Of most concern for the River Spree are ammonia toxicity and low oxygen concentrations during CSO. As a preparation of the modelling effort within SAM-CSO, the report aims at (i) an overview of common concepts of river water quality models and (ii) a detailed account of model formulations that impact ammonium and oxygen regimes of lowland rivers.

Overview of common concepts

In general, river water quality models split a river section into a finite number of segments, for which the following three components are run:

- a hydraulic model, which calculates a flow field and – in the case of rivers – water depth for each simulated segment,
- a transport model, which describes the (conservative) transport of dissolved and suspended substances between simulated segments and
- a reaction model, which simulates all biogeochemical transformations.

Common approaches were discussed and classified according to complexity (chapter 2) for hydraulic models, transport models and the reaction sub-models

- biological degradation,
- acid-base equilibria,
- closed mass balances,
- processes at the sediment,
- microorganisms,
- phytoplankton species,
- benthic algae and macrophytes and
- organisms of higher trophy.

Ideally model complexity should be adapted to specific application to avoid unnecessary calculation time and data collection and to simplify interpretation of results.

Several popular river water quality models are studied in chapter three of this report and classified according to the defined complexity levels. Models have been chosen, based on their popularity in application and scientific literature (Qual2K, WASP7, CE-QUAL-W2, MIKE11, RWQM1), as well as their specific use for CSO assessment (RIVE, Qsim). Moreover the model Infoworks RS was assessed, a relatively recent water quality application by Wallingford Ltd. The assessment showed that each of the studied models has certain aspects, which are dealt with in great detail. For instance,

- Qsim is most detailed regarding biological parameters, which makes it well suited to represent seasonal changes in river water quality, including the impacts of phytoplankton succession, seasonal growth of benthic algae and macrophytes, as well as filter feeders.
- RIVE focuses particularly on different size classes of microorganisms, which may be critical when judging the effect of sewage inflow.
- WASP7 has the most detailed sediment compartment, enabling the representation of sediment feedback, increase of sediment thickness, compaction and seasonal erosion, which may be critical for channels used for shipping or the assessment of pollution with suspended particles.
- RWQM1 takes great care to consider full mass balances by following each chemical element throughout the river system.

On the other hand, none of the model applications reaches highest complexity level throughout. Although complexity can be adapted to a certain extent in all applications, only the tools Aquasim (for RWQM1) and Ecolab (for MIKE11) allow full and simple control of processes, process stoichiometry and process rates.

Adaptation of the model to specific questions will be of special relevance when integrating with an urban drainage model. Here, even more than in usual modelling studies it is necessary to reduce the complexity and the size of integrated models as far as possible.

Model formulations for ammonium and oxygen regime during CSO

Along the focus of the project SAM-CSO, the fourth chapter of this report focuses on ammonium and dissolved oxygen (DO) in rivers, given their importance for aquatic organisms during the impact of CSO. Most relevant processes were identified (a) based on values and empirical relationships from literature or (b) based on steady-state ammonium and DO sensitivities for the River Spree, calculated using well documented water quality model equations.

For the River Spree during CSO influence, nitrification turned out to be the most important process for ammonium representation, whereas for the DO regime

- oxygen consumption as a result of decay of organic matter in the water column,
- photosynthetic oxygen production by phytoplankton or sessile plants,
- exchange with atmospheric oxygen (often referred to as reaeration),
- oxygen consumption as a result of decay of organic matter at the river bed and
- nitrification

were identified as major processes. For all the processes above, different modeling approaches are discussed in chapter 4 of this report.

Nitrification – The overview indicates that a simple approach, which assumes that nitrification depends only on NH_4 and DO concentration may work well. More complex approaches, which consider populations of nitrifying bacteria, create a time lag in nitrification because populations need to build up. It is suggested to judge from future measurements in the River Spree, whether a significant delay of nitrification can be observed. If there is a significant lag, nitrifier population should be considered; otherwise a simple approach can be used.

Decay of organic matter – The formulation of decay of organic matter in Qsim seems well suited to cope with organic decay during CSO. The main question is whether specific CSO constituents need to be included, such as microorganisms or an extra class of fast degradable organic matter.

Reaeration – Although many studies have dealt with reaeration, it is difficult to assess a sensible value for the River Spree. Different reaeration rates will therefore have to be tested.

Phytoplankton growth – Phytoplankton models are quite established. In the application for the River Spree local calibration of growth rates and/or adaptations to light conditions in the River Spree may be necessary.

Decay at sediment –The simplest possible approach should be used for the simulation of the River Spree for the evaluation of CSO. Depending on model tests, a simple temperature-dependent sediment oxygen demand or a sediment compartment with the same processes as in the water column might suffice. It is not suggested to use a more complex approach unless clearly indicated by measurements.

Abstract (German)

Süßwasserökosysteme beruhen auf komplexen Wechselwirkungen biogeochemischer Prozesse, d.h. physikalischer (z.B. Mischung, Gasaustausch), geochemischer (z.B. Nährstoffrecycling, Sauerstoffverbrauch) and biologischer (z.B. Algenwachstum, mikrobiologisch katalysierte chemische Reaktionen) Prozesse. Seit den 1980er Jahren werden Gewässergütemodelle eingesetzt, um diese Prozesse einzeln aufzuschlüsseln oder besser zu verstehen und um die zukünftige Entwicklung des Gütezustands von Seen und Flüssen vorauszusagen. Heutzutage stellen Modelle ein wichtiges Management-Werkzeug für die Bearbeitung vielfältiger angewandter Fragestellungen im Bereich der Oberflächengewässer dar.

Im KWB-Projekt SAM-CSO ist geplant, Gewässergütemodelle einzusetzen, um die Auswirkungen von Mischwassereinleitungen (engl.: combined sewer overflows, CSO) auf die Gewässergüte der Berliner Stadtspree zu simulieren. Von größter Bedeutung während Mischwassereinleitungen sind die Ammoniaktoxizität sowie niedrige Sauerstoffkonzentrationen im Gewässer. Als Vorbereitung der Modellierungsarbeiten in SAM-CSO soll dieser Bericht (i) einen Überblick über gebräuchliche Konzepte von Fließgewässergütemodellen und (ii) eine detaillierte Aufstellung von Modellformulierungen bezüglich des Ammonium- und Sauerstoffregimes in Flachlandflüssen geben.

Überblick über gebräuchliche Modellkonzepte

Im Allgemeinen teilen Flussgütemodelle einen Flussabschnitt in eine feste Anzahl von Segmenten ein, für welche die drei folgenden Modellkomponenten berechnet werden:

- ein hydraulisches Modell, welches Fließgeschwindigkeit und Wasserstand für jedes simulierte Flusssegment berechnet,
- ein Transportmodell, welches den (konservativen) Transport gelöster und suspendierter Substanzen zwischen den simulierten Segmenten berechnet und
- ein Reaktionsmodell, welches alle biogeochemischen Umwandlungen berechnet.

In diesem Bericht diskutiert und nach ihrer Komplexität eingeteilt werden übliche Ansätze für hydraulische Modelle, Transportmodelle und Reaktionsteilmodelle für

- biologischen Abbau,
- Säure-Base-Gleichgewicht,
- geschlossene Massenbilanzen,
- Prozesse an der Gewässersohle (Sediment),
- Mikroorganismen,
- Phytoplankton-Arten,
- benthische Algen und Makrophyten und
- Organismen höherer Trophiestufen.

Idealerweise sollte die Modellkomplexität an den konkreten Anwendungsfall angepasst werden, um Berechnungszeit und erforderliche Datenmengen zu begrenzen und um die Interpretation der Berechnungsergebnisse zu vereinfachen.

Dieser Bericht betrachtet einige gängige Flussgütemodelle und teilt diese in Bezug auf ihren Komplexitätsgrad ein. Die Modelle wurden sowohl gemäß der Häufigkeit ihrer Anwendung und der Erwähnung in der wissenschaftlichen Literatur ausgewählt (Qual2K, WASP7, CE-QUAL-W2, MIKE11, RWQM1) als auch aufgrund ihres spezifischen Einsatzes für die Beurteilung der Auswirkungen von Mischwassereinleitungen (RIVE, QSim). Darüber hinaus wurde das Modell InfoWorks RS beurteilt, eine seit erst relativ kurzer Zeit verfügbare Gewässergüteanwendung der Firma Wallingford Software Ltd.
Der Modellvergleich ergab, daß alle untersuchten Modelle jeweils einige Gewässergüteaspekte in großer Genauigkeit abbilden. Zum Beispiel

- weist QSim den höchsten Detaillierungsgrad in Bezug auf biologische Parameter auf, so dass es gut geeignet ist, saisonale Schwankungen der Gewässerqualität, einschließlich der Einflüsse von Phytoplanktonsukzession, saisonalem Wachstum benthischer Algen und Makrophyten sowie von Filtrierern, wie z.B. Flussmuscheln, abzubilden.
- setzt RIVE einen besonderen Fokus auf verschiedene Größenklassen von Mikroorganismen, die relevant sein können im Hinblick auf die Beurteilung des Einflusses von Mischwasserüberläufen.
- hat WASP7 den am stärksten detaillierten Sediment-Baustein, der Auswirkungen auf den überstehenden Wasserkörper, Zunahme der Sedimentdicke, Verdichtung und saisonale Erosion abbilden kann. Die Betrachtung dieser Prozesse kann insbesondere für Schiffahrtskanäle oder für die Beurteilung der Verschmutzung mit suspendierten Stoffen entscheidend sein.
- achtet RWQM1 auf geschlossene Massenbilanzen, indem jedes chemische Element innerhalb des Gewässersystems vollständig verfolgt wird.

Auf der anderen Seite erreicht keines der betrachteten Modelle durchgängig höchsten Detaillierungsgrad. Obwohl alle Modelle bis zu einem gewissen Maße eine Anpassung des Detaillierungsgrads ermöglichen, erlauben nur die Werkzeuge Aquasim (für RWQM1) und Ecolab (für MIKE11) volle und einfache Kontrolle über Prozesse, Prozess-Stöchiometrien und Prozessraten.

Die Anpassung eines Gewässergütemodells an spezifische Fragestellungen wird von besonderer Bedeutung sein, wenn es mit einem Stadtentwässerungsmodell gekoppelt werden soll. Dabei wird es noch mehr als in gewöhnlichen Modellierungsstudien nötig sein, die Komplexität und die Größe des integrierten Modells so weit wie möglich zu reduzieren.

Modellformulierungen für Ammonium- und Sauerstoffregime während CSO

Gemäß dem Fokus des Projekts SAM-CSO behandelt dieser Bericht schwerpunktmäßig die Ammonium- und Sauerstoffkonzentrationen im Fluss, die für aquatische Organismen während Mischwassereinleitung von entscheidender Bedeutung sind. Die am relevantesten Prozesse wurden identifiziert anhand von (a) Messwerten und empirischen Beziehungen aus der Literatur oder (b) stationären Ammonium- und Sauerstoff-Sensitivitäten, die anhand von gut dokumentierten Wassergüte-Modellgleichungen (RWQM1) für die Spree berechnet wurden.

Für die von Mischwassereinleitungen beeinflusste Spree wurde die Nitrifikation als bedeutendster Prozess für die Entwicklung der Ammoniumkonzentration ermittelt. Für das Regime des gelösten Sauerstoffs hingegen wurden

- Sauerstoffverbrauch durch Abbau organischen Materials in der Wassersäule,
- photosynthetische Sauerstoffproduktion durch Phytoplankton oder sessile Pflanzen,
- Austausch mit atmosphärischem Sauerstoff (Wiederbelüftung),
- Sauerstoffverbrauch durch Abbau organischen Materials im Flussbett und
- Nitrifikation.

als Hauptprozesse identifiziert. Für alle genannten Prozesse werden verschiedene Modellierungsansätze diskutiert.

Nitrifikation – Die Übersicht zeigt, dass ein einfacher Ansatz, demzufolge die Nitrifikation nur von den Konzentrationen von Ammonium (NH_4^+) und gelöstem Sauerstoff abhängt, gute Ergebnisse liefern kann. Komplexere Ansätze, die Populationen von nitrifizierenden Bakterien berücksichtigen, können den (langsamen) Aufbau der Nitrifikanten-Population und die sich hieraus ergebende zeitliche Verzögerung der Nitrifikation abbilden. Es wird vorgeschlagen, anhand von zukünftigen Messungen in der Spree zu beurteilen, ob eine nennenswerte Verzögerung des Beginns der Nitrifikation beobachtet werden kann. Ist dies der Fall, sollten Populationen nitrifizierender Bakterien bei der Modellierung berücksichtigt werden. Andernfalls kann ein einfacherer Ansatz gewählt werden.

Abbau organischer Substanz – Die Formulierung des Abbaus organischer Substanz in QSim scheint gut geeignet zu sein, die Verhältnisse während Mischwassereinleitungen abzubilden. Die entscheidende Frage wird sein, ob spezifische Bestandteile des Mischwassers berücksichtigt werden müssen, wie zum Beispiel Mikroorganismen oder eine eigene Klasse schnell abbaubarer organischer Substanzen.

Wachstum von Phytoplankton – Phytoplankton-Modelle sind weitgehend etabliert. Im Falle der Anwendung auf die Spree können lokale Kalibrierungen von Wachstumsraten und/oder Anpassungsraten an Lichtverhältnisse notwendig werden.

Wiederbelüftung – Obwohl sich viele Studien mit der Wiederbelüftung beschäftigt haben, ist es schwierig, einen allgemeingültigen Wert für die Spree zu bestimmten. Aus diesem Grund werden verschiedene Wiederbelüftungsraten getestet werden müssen.

Abbau im Sediment – Für die Simulation des Mischwassereinflusses auf die Spree sollte der einfachste mögliche Ansatz verwendet werden. In Abhängigkeit von Modelltests sollte entschieden werden, ob der Ansatz eines einfachen temperaturabhängigen Sediment-Sauerstoffbedarfs oder ein Sediment-Baustein, der dieselben Prozesse abbildet, die auch im Wasserkörper ablaufen, ausreichen. Solange nicht klar durch Messungen indiziert, wird von der Verwendung eines komplexeren Ansatzes abgeraten.

Abstract (French)

Les écosystèmes d'eau douce reposent sur les interactions complexes de mécanismes biogéochimiques, notamment physiques (exemples : homogénéisation, échanges gazeux), géochimiques (exemples : recyclage des nutriments, consommation d'oxygène) et biologiques (exemples : croissance des algues, réactions chimiques à catalyseur microbiologique). La mise en œuvre de modèles de qualité de l'eau depuis les années 1980 a permis de mieux appréhender et distinguer ces processus, et de prévoir l'évolution de la qualité des lacs et des rivières. Ces modèles sont devenus des outils essentiels pour gérer une multitude d'enjeux appliqués dans le domaine des eaux de surface.

Dans le cadre de son projet SAM-CSO, le Centre de Compétence des Eaux de Berlin (KWB) prévoit de recourir à de tels modèles pour simuler l'impact sur la Spree, la rivière berlinoise, des rejets des déversoirs d'orage par temps de pluie (appelés, par souci de simplification, CSO – Combined sewer overflow). La toxicité due à l'ammoniac et les faibles concentrations d'oxygène dans les eaux de la Spree lors de ces rejets sont des facteurs particulièrement importants pour les organismes aquatiques. Le présent rapport, conçu pour préparer les travaux de modélisation du projet SAM-CSO, propose (i) un aperçu des concepts usuels des modèles de qualité de l'eau et (ii) une présentation détaillée des équations de référence des modèles se rapportant aux teneurs en ammonium et en oxygène des rivières de plaine.

Vue d'ensemble des concepts usuels

En règle générale, les modèles de qualité de l'eau découpent un tronçon de rivière en un nombre fini de segments fictifs, pour lesquels les trois composants suivants sont calculés :

- un modèle hydraulique qui calcule la vitesse d'écoulement et la profondeur d'eau de chaque segment,
- un modèle de transport décrivant le transport (conservatif) des substances dissoutes et des matières en suspension d'un segment à l'autre, et
- un modèle de réaction qui simule l'ensemble des mécanismes biogéochimiques.

Les approches les plus courantes ont été étudiées et classées selon leur degré de complexité (chapitre 2) pour les modèles hydrauliques et de transport, ainsi que pour les sous-modèles de réaction :

- dégradation biologique,
- équilibre acido-basique,
- bilans massiques en système fermé,
- processus au niveau des sédiments,
- micro-organismes,
- espèces phytoplanctoniques,
- algues et macrophytes benthiques, et
- organismes de niveau trophique supérieur.

Il est préférable d'adapter la complexité du modèle au cas concerné afin de réduire le temps de calcul et le volume des données à recueillir, et de faciliter l'interprétation des résultats.

Le chapitre trois présente quelques modèles usuels de qualité de l'eau en rivière, classés par degré de complexité. Ces modèles ont été choisis pour leur fréquence d'utilisation et leur récurrence dans la littérature scientifique (Qual2K, WASP7, CE-QUAL-W2, MIKE11, RWQM1), ainsi que pour leur aptitude à représenter l'impact des rejets des CSO (RIVE, Qsim). Par ailleurs, le modèle Infoworks RS, développé par Wallingford Software et disponible depuis peu, a fait l'objet d'une évaluation. La comparaison des modèles a montré que chacun d'eux permettait de représenter de manière détaillée certains aspects précis de la qualité de l'eau. Par exemple :

- S'agissant des paramètres biologiques, Qsim est le plus détaillé ; il se prête donc bien à la représentation des variations saisonnières de la qualité de l'eau en rivière, et notamment de l'impact des successions phytoplanctoniques, de la croissance saisonnière des algues et macrophytes benthiques, ainsi que des organismes filtreurs (comme les mulettes).
- RIVE met l'accent sur différentes classes de taille de micro-organismes, ce qui est peut être utile pour évaluer l'impact des CSO.
- WASP7 possède le module sédimentaire le plus élaboré ; il permet ainsi de représenter les interactions des sédiments avec la phase liquide, l'augmentation de l'épaisseur de la couche de sédiments, leur compacité et l'érosion saisonnière. La prise en compte de ces processus peut s'avérer déterminante pour les canaux de navigation, ou pour évaluer la pollution par les matières en suspension.
- RWQM1 prend particulièrement en compte les bilans massiques en système fermé, dans lequel chaque élément chimique est suivi au sein de l'hydrosystème.

Par ailleurs, aucun des modèles étudiés n'atteint le degré de précision maximal dans tous les domaines. Si, pour la plupart des applications, il est possible d'adapter dans une certaine mesure ce degré de précision, seuls les outils Aquasim (pour RWQM1) et Ecolab (pour MIKE11) permettent de contrôler d'une manière simple et néanmoins complète les processus, la stœchiométrie des réactions chimiques et la constante de vélocité de réaction.

L'aptitude d'un modèle de qualité de l'eau à répondre à des questions spécifiques prend toute son importance lors du couplage de ce modèle avec un modèle du réseau d'assainissement. Plus encore que dans les études de modélisation habituelles, il importe de limiter au maximum la complexité et la taille du modèle intégré.

Formulations du modèle d'évolution des teneurs en ammonium et en oxygène lors des événements de surverse

Conformément à l'objectif du projet SAM-CSO, le chapitre quatre se concentre sur les concentrations en ammonium et en oxygène dissous dans les eaux de rivière, ces deux facteurs étant déterminants pour les organismes aquatiques soumis à des rejets. La plupart des processus significatifs ont été identifiés en s'appuyant sur (a) les données et

les relations empiriques de la littérature, ou (b) la sensibilité à l'ammonium et à l'oxygène dissous de la Spree à l'équilibre, calculée à l'aide d'équations de modèles de qualité de l'eau (RWQM1) bien documentées.

Dans le cas de la Spree, la nitrification a été identifiée comme étant le processus le plus important pour la représentation de la teneur en ammonium lors des rejets. En revanche, pour apprécier la concentration en oxygène dissous, on a retenu ici comme phénomènes significatifs :

- la consommation d'oxygène liée à la dégradation de la matière organique dans la colonne l'eau,
- la production photosynthétique d'oxygène par le phytoplancton ou des plantes sessiles,
- les échanges avec l'oxygène atmosphérique (le terme de réaération est également employé),
- la consommation d'oxygène liée à la dégradation de la matière organique au niveau du lit de la rivière (sédiments) et
- la nitrification.

Les différentes approches de modélisation examinées pour chacun des processus précédents sont présentées au chapitre 4.

Nitrification – Comme le montre la vue d'ensemble, une approche partant d'un principe simple – la nitrification dépend uniquement des concentrations en ions ammonium (NH_4) et en oxygène dissous – peut donner de bons résultats. Des approches plus complexes, prenant en compte les populations bactériennes nitrifiantes, sont à même de représenter la formation de ces populations et le décalage temporel qui en résulte pour la nitrification. Il serait donc préférable d'attendre de futures mesures dans la Spree, afin de savoir si la nitrification intervient avec un important décalage dans le temps. Si tel est le cas, les populations bactériennes nitrifiantes pourront être prises en compte dans la modélisation ; sinon, une approche simple pourra suffire.

Dégradation de la matière organique – La formulation de ce processus dans Qsim semble bien adaptée à la représentation de ce qui se produit lors d'un événement de surverse. Il reste cependant à savoir si certains constituants spécifiques des rejets des CSO – tels les micro-organismes ou une autre classe particulière de matière organique rapidement dégradable – doivent être pris en compte.

Réaération – Bien que ce phénomène ait fait l'objet de nombreuses études, il est difficile de déterminer une valeur pertinente pour la Spree. Il convient par conséquent de tester différents taux de réaération.

Croissance phytoplanctonique – Les modèles de croissance du phytoplancton existent de longue date et sont bien établis. Pour la Spree, il peut s'avérer nécessaire d'effectuer un calage local des taux de croissance ou d'adaptation à l'intensité lumineuse.

Dégradation au niveau des sédiments – Il convient d'utiliser l'approche la plus simple possible pour simuler l'impact des déversoirs d'orage sur la Spree. Les tests du modèle doivent permettre de déterminer s'il suffit de partir d'un principe simple (« les besoins en oxygène des sédiments dépendent uniquement de la température ») ou d'utiliser un module sédimentaire simulant les mêmes processus que dans la colonne d'eau. Le

recours à une approche plus complexe ne s’impose pas, sauf si la campagne de surveillance en fait apparaître la nécessité.

Acknowledgments

I would like to thank Stefan Thober who supported this report within his internship at KWB, as well as Volker Kirchesch and Arne Hammrich who supplied documentation on Qsim and Mike 11, respectively. An earlier version of the report was improved significantly thanks to the review by Jan Köhler.

Definition of terms used in the report

Assimilation	Transformation of substances, such as nutrients or elements into living biomass (e.g., phytoplankton assimilates CO_2)
Biogeochemistry	Science of chemical, physical, geological, and biological processes and reactions that govern the composition of the natural environment
Biomass	Living organic matter
Diagenesis	Any chemical, physical, or biological change undergone by sediment after its initial deposition
Organic matter	Here always used for dead organic matter (in contrast to living organic matter, which is referred to as “biomass”), in reality dead organic matter is always mixed with microorgansims
Stoichiometry	Stoichiometry is the relationship of the reactants and products in a balanced chemical reaction (e.g., 4 mg O_2 are needed to oxidize 1 mg NH_4) or the relative composition of molecules (e.g., algal biomass has a typical molar stoichiometry of C:N:P = 106:16:1)

Table of Contents

Chapter 1 Introduction 1
Chapter 2 Setup of river water quality models 3
2.1 Hydraulic model.....3
2.2 Transport model 5
2.3 Reaction model: Biogeochemical model approaches 6
2.3.1 Biological degradation 7
2.3.2 Acid-base equilibria 8
2.3.3 Closed mass balances.....9
2.3.4 Processes at the sediment 10
2.3.5 Microorganisms 11
2.3.6 Phytoplankton species.....12
2.3.7 Benthic algae and macrophytes 13
2.3.8 Organisms of higher trophy 14
Chapter 3 Model applications 16
3.1 Examples of existing model applications.....16
3.1.1 Qual2K.....18
3.1.2 WASP7 19
3.1.3 CE-QUAL-W2 20
3.1.4 ECO Lab/MIKE11 21
3.1.5 RWQM1 22
3.1.6 RIVE/PROSE.....23
3.1.7 Qsim/Hydrax 24
3.1.8 Infoworks RS 25
3.2 Integration of water quality models with urban drainage models.....26
Chapter 4 Model representation of the ammonium and oxygen budget of rivers after combined sewer overflows.....29
4.1 Ammonium 29
4.1.1 Model formulation for nitrification.....31
4.2 Dissolved oxygen 35
4.2.1 Model formulation for oxygen demand from nitrification 37
4.2.2 Model formulations for decay of organic matter.....37
4.2.3 Model formulation for exchange with atmosphere 41

4.2.4 Model formulation for photosynthetic oxygen production by phytoplankton ... 43
4.2.5 Model formulation for sediment oxygen demand ... 46
Chapter 5 Conclusions ... 48
5.1 Range of river water quality models ... 48
5.2 Main challenges in CSO representation with Qsim ... 49
Bibliography ... 51
Appendix: Empirical equations for river reaeration ... 56

Chapter 1
Introduction

Freshwater ecosystems are based on complex interactions of biogeochemical processes, i.e. physical (e.g., mixing, gas exchange), geochemical (e.g., nutrient recycling, oxygen consumption) and biological (e.g., algae growth, microbiologically catalysed chemical reactions) processes (e.g., Wetzel 2001). As a consequence of this close interaction biogeochemical processes are typically difficult to separate. For instance if one is interested in the phosphorus concentration in a river, one needs to consider algal uptake and consequent settling.

Since the 1980s, water quality models have been used to better understand or untangle these processes and to make predictions on future development. Currently water quality models are applied for a wide range of applied and scientific questions. Here, the term “water quality model” is used according to common reference in scientific literature (e.g., Rauch et al. 1998b). Following this terminology, water quality models are models that simulate chemical and/or biological transformation processes in lakes, reservoirs and rivers. Thus the term “water quality” is slightly misleading, since water quality models can also include biological parameters. Water quality models are used if reactions in a freshwater (eco)system are of interest. Consequently the following model types are not considered as water quality models:

- Hydraulic/physical models, which predict flow, water levels or turbulent mixing and do not include transformation processes (e.g., EPA model EFDC (Hamrick 1992) or commercial model Telemac (Galland et al. 1991)), though they are needed as a hydraulic basis for water quality models.
- Material flux models, which are not based on a hydraulic model and do not represent transformation processes in rivers or lakes (except potentially a fixed retention rate). Such models aim at an assessment of material balances (Möller et al. 2008) and are typically used at catchment scale (e.g., Moneris: Behrendt et al. (2000) or SWAT: Neitsch et al. (2001)). However they do not provide information on reactions in the lakes or rivers themselves.
- Multitrophic models, which are used mainly scientifically to assess full biological food chains (e.g., Wootton et al. 1996), based on the interaction and long-term equilibria on the species level. Multitrophic models focus solely on biology, without taking into account deterministic biogeochemical processes.

The following report focuses on water quality models, which simulate rivers one-dimensionally in flow direction. It aims at giving an overview of frequently applied concepts in river water quality modelling, rather than a list of available software applications. Still, some software solutions or published models are described exemplarily.

With respect to the focus of the project SAM-CSO, processes linked to critical impacts from combined sewer overflows (CSO) are considered in greater detail. The CSO impacts of most concern for the River Spree are ammonia toxicity and low oxygen

concentrations (Leszinski et al. 2007). Consequently processes, which affect oxygen or ammonium are discussed.

The report is outlined as follows. Chapter 2 explains the conceptual setup of river water quality models, with a specific focus on approaches of varying complexity. Examples of available models, their typical range of use and their possible integration with other models are given in Chapter 3. Finally in Chapter 4 processes affecting the oxygen or ammonium budget in the river are discussed in greater detail.

Chapter 2

Setup of river water quality models

River water quality models (with the exception of simple one-box-models) split a river section into a finite number of segments, for which the following three components are run:

- a hydraulic model, which calculates a flow field and – in the case of rivers – water depth for each simulated segment,
- a transport model, which describes the (conservative) transport of dissolved and suspended substances between simulated segments and
- a reaction model, which simulates all biogeochemical transformations.

The following chapter gives an overview of varying complexity for each of the three model components. These complexities are based on existing approaches in one-dimensional river water quality modelling. Complexity level 1 in Tables 2.1, 2.2 and 2.4 to 2.11 corresponds to the model Qual2E (Brown and Barnwell 1987), which is the basis of essentially all current water quality model applications.

2.1 Hydraulic model

Most of the one dimensional river water quality models are based on the St.Venant equations, which are a simplification of the Navier-Stokes-approach (e.g., Fischer et al. 1979). The numeric solution of the full set of the St.Venant equations (see Table 2.1) offers a instationary flow simulation, taking into consideration river bed geometry, friction, abrupt changes in inflow, up- and downstream propagation of waves, as well as backwater effects (Dyck and Peschke 1995). Most models use further simplification, since the integration of the St.Venant equations is numerically complex and only necessary for strong backwater effects or flow variations.

A first simplification is the so-called diffusive wave approximation. It neglects the acceleration term in the momentum equation (Table 2.1). Together with the continuity equation it can be written in the form of Fickian diffusion, hence its name. The diffusive wave approximation allows the simulation of backwater effects as a „longitudinal diffusion“ of waves, which often leads to very good results (Shanahan et al. 2001).

In the kinematic wave approximation the pressure term is neglected additionally (Table 2.1). The kinematic wave approximation is probably the most frequently used approach in river water quality modelling. It allows a good simulation of variable flow and even flood waves, as long as no significant backwater effects occur. In addition the simulation is limited to positive flow velocities (Shanahan et al. 2001).

Table 2.1: Complexity levels for one dimensional hydraulic models

Approach		Complexity *
stationary approaches		
Manning-Strickler equation	$Q = S_0^{1/2} \cdot A \cdot k_{st} \cdot \left(\frac{A}{P}\right)^{2/3}$ momentum equation	1
Non-stationary approaches (based on St.Venant equations)		
Kinematic wave approximation	$Q = S_0^{1/2} \cdot A \cdot k_{st} \cdot \left(\frac{A}{P}\right)^{2/3}$ momentum equation $\frac{\partial h}{\partial t} + \frac{1}{W}\frac{\partial Q}{\partial x} = \frac{q}{W}$ continuity equation	2
Diffusive wave approximation	$\frac{\partial Q}{\partial t} + g \cdot A \cdot \frac{\partial h}{\partial x} - g \cdot A \cdot (S_0 - S_f) = 0$ momentum eq. (where S_f from Manning-Strickler equation) $\frac{\partial h}{\partial t} + \frac{1}{W}\frac{\partial Q}{\partial x} = \frac{q}{W}$ continuity equation	3
Dynamic wave approach = full St.Venant equations	$\frac{\partial Q}{\partial t} + \frac{\partial}{\partial x}\left(\frac{Q^2}{A}\right) + g \cdot A \cdot \frac{\partial h}{\partial x} - g \cdot A \cdot (S_0 - S_f) = 0$ momentum equ. (where S_f from Manning-Strickler equ.) $\frac{\partial h}{\partial t} + \frac{1}{W}\frac{\partial Q}{\partial x} = \frac{q}{W}$ continuity equation	4

where Q [m^3 s^{-1}] is flow, S_0 [-] is bed slope, S_f [-] is friction slope, A [m^2] ist he wetted cross-sectional area, P [m] ist he wetted perimeter, k_{st} [-] is the friction coefficient after Strickler, h [m] is mean water depth, W [m] mean river width, g [m s^{-2}] is gravitational acceleration and q [m^3 s^{-1}] is lateral inflow. For details on the equations see Dyck and Peschke (1995).

* Level 1 corresponds to the model Qual2E

Apart from the non-stationary St. Venant equations there are also stationary model approaches. However these are limited to situations where flow does not change over the simulated time. If a stationary hydraulic model is applied, flow is calculated once for each river segment. Most models with a stationary hydraulic approach use the Manning-Strickler equation (Table 2.1; which is used by non-stationary models to calculate the friction slope S_f). Flow is then only dependent on slope, river bed geometry and wetted perimeter (e.g., Chapra et al. 2007).

2.2 Transport model

One-dimensional transport can be described through the following vector equation (e.g., Rauch et al. 1998b) :

$$\frac{\partial(A \cdot C)}{\partial t} = \underbrace{-\frac{\partial(Q \cdot C)}{\partial x}}_{\text{Advective transport}} + \underbrace{\frac{\partial}{\partial x}\left(A \cdot D_L \cdot \frac{\partial C}{\partial x}\right)}_{\text{Dispersion}} \qquad 2.1$$

where C [mg m^{-3}] is the concentration vector of all simulated state variables (laterally averaged), t [s] is time, x [m] is the coordinate in flow direction, A [m^2] is the cross-sectional river area, Q [m^3 s^{-1}] is the flow, D_L [m^2 s^{-1}]is the longitudinal dispersion.

According to equation 2.1 the transport-dependent temporal change of a state variable (i.e. the concentration of a dissolved or suspended substance) in a river segment is the result of two terms. The advection term describes the amount of the substance flowing into and out of the river segment. The flow Q (i.e. $\partial Q/\partial x$) and the wetted cross-sectional area are an output from the hydraulic model.

The second term on the right side of equation 2.1 describes substance dispersion during flow. The dispersion of a concentration peak is the result of turbulent diffusion and the laterally heterogenous flow velocity. Since these processes cannot be represented correctly by a one-dimensional model, a „longitudinal dispersion“ is introduced in equation 2.1. The dispersion coefficient is dependent on flow, river geometry and friction (Fischer et al. 1979).

Advective transport is simulated by every river water quality model. However models differ regarding the dispersion term, which is often neglected (Rauch et al. 1998b). The question whether dispersion is important for a given river system can be evaluated based on the method proposed by Shanahan et al. (2001).

Table 2.2: Complexity levels for one dimensional transport models

Approach	Complexity*
Advective transport	1
Advective transport and dispersion	2

* Level 1 corresponds to the model Qual2E

2.3 Reaction model: Biogeochemical model approaches

Equation 2.1 can be extended with a reaction term as follows:

$$\frac{\partial(A \cdot C)}{\partial t} = \underbrace{-\frac{\partial(Q \cdot C)}{\partial x} + \frac{\partial}{\partial x}\left(A \cdot D_L \cdot \frac{\partial C}{\partial x}\right)}_{\text{Transport model}} + \underbrace{A \cdot R(C,P)}_{\text{Reaction model}} \qquad 2.2$$

where R is the vector of reaction rates (of physical, chemical and biological processes) which depend on the concentration vector C and the matrix of model parameters P.

As a result of the reaction term in equation 2.2, transported substances are no longer conservative but can undergo physical, chemical and biological transformations. Typically, the transformation (i.e. increase or decrease) of a substance such as dissolved oxygen (DO) is not only depending on itself but on a variety of state variables, such as biological oxygen demand (BOD). The form of the dependence is defined by the parameters P. These parameters are typically taken from existing empirical studies. Nevertheless parameters P are often fitted in calibration exercises, since processes are not exactly known (in contrast to hydraulic principles) and parameters can change significantly between different rivers (e.g., oligotrophic versus eutrophic rivers) (Reichert et al. 2001).

The complexity of the transport model depends on the chosen hydraulic model (Chapter 2.1) and the consideration of dispersion (Chapter 2.2). The differences among existing applications in the reaction model, the actual water quality component, are significant in comparison. Probably the first water quality model approach was described by Streeter and Phelps (1925). They considered two state variables, DO and BOD, which were controlled by two processes, atmospheric exchange and degradation. However, the precursors of current water quality models were only developed in the 1980s, when technology allowed numerical solution of more complex systems. It was the model Qual2E (Brown and Barnwell 1987), which first represented cycles of oxygen (O), nitrogen (N) and phosphorus (P). Basically all current water quality model approaches are based on the O,N,P-approach of the EPA's Qual2 model family (Rauch et al. 1998b). The state-of-the-art version Qual2E simulated ten state variables DO, BOD, NO_2, NO_3, NH_4, organically bound N-org, SRP, organically bound P-org, algal biomass ABM, as well as temperature T. These state variables were in turn transformed by the 15 biogeochemical processes in Table 2.3 (excluding heat balance).

The classical O,N,P-approach has since been enhanced in many aspects. Particular aims of these enhancements were (i) the inclusion of further state variables which are relevant for water management questions and (ii) a more realistic representation of natural processes to improve the prognostic capability of water quality models (Shanahan et al. 1998).

Common enhancements are discussed in the following eight subsections (2.3.1 to 2.3.8). For each enhancement, the approaches are classified according to their level of complexity. The lowest complexity in all subsections is rated with 1, which corresponds

to the approach in the model Qual2E. The complexity levels will also be used to distinguish between existing models in chapter 3.

There is hardly a model, which uses highest complexity for each of the subsequent enhancements (see Chapter 3.1). Ideally, the overall model complexity should be adapted to the specific question, allowing good representation of relevant processes with a minimal effort for measurements and modelling. Shanahan et al. (2001) and Vanrolleghem et al. (2001) proposed such an approach to adapt the set of biogeochemical model equations to a specific problem.

Table 2.3: Biogeochemical processes of the model Qual2E (adapted from Rauch et al. 1998b)

DO-cycle	(1) Gas exchange with atmosphere (2) Degradation of BOD (BOD only from external sources) (3) Sedimentation of BOD (percentage) (4) Sediment oxygen demand (via constant rate)
N-cycle	(5) N-hydrolysis (Dissolution of N-org to NH_4) (6) Nitrification first step (Oxidation of NH_4 to NO_2) (7) Nitrification second step (Oxidation of NO_2 to NO_3) (8) N-sedimentation (percentage) (9) N-release from sediment (in the form of NH_4, via constant rate)
P-cycle	(10) P-hydrolysis (Dissolution of P-org to SRP) (11) P sedimentation (percentage) (12) P-release from sediment (in the form of SRP, via constant rate)
Phyto-plankton	(13) Photosynthesis (Production of biomass depending on river depth, NH_4, NO_3 and SRP) (14) Respiration (by phytoplankton under consumption of DO and release P-org und N-org, but without effect on BOD) (15) Sedimentation of phytoplankton (percentage)

2.3.1 Biological degradation

In Qual2E biological degradation in the water column is only occurring for BOD, which enters the river via its inputs (process 2 in Table 2.3). An internal production of BOD, e.g., via dead phytoplankton, is not considered. In “modern” water quality models the production of dead organic matter is generally accounted for.

BOD summarizes the oxygen demand of both dissolved organic matter (DOM) and particulate organic matter (POM). Qual2E considers this difference only through a sedimentation process (process 3 in Table 2.3), which removes a certain percentage of the available BOD with every time step. A more explicit differentiation between DOM and POM makes sense from a mechanistic point of view. POM needs to be hydrolysed before it can be utilized by micro-organisms (e.g., Wetzel 2001). As a result (easily degradable) DOM is degraded faster than (easily degradable) POM. In the case of a distinction between POM and DOM, sedimentation of POM can be directly simulated with

a settling velocity. Finally adsorption of substances to POM can be included (Reichert et al. 2001).

The degradation rate of DOM and POM can vary significantly depending on its composition. For instance only a certain percentage of the biomass, which is assimilated in a river is actually degraded by microorganisms. This is reflected by the DOC/POC-yield of microrganisms, which is only around 5 % for dissolved humic sustances, between 14 and 58 % for phytoplankton and up to 75 % for excreta (Kalff 2003). Consequently DOM and POM from sewage effluents (e.g., during a CSO) are generally degraded more completely and faster than internally assimilated biomass or terrestrial input. Many model applications take these differences into account by splitting organic matter into two or more types of degradability.

Qual2E assumes that organic matter is only degraded by utilizing DO as an oxidant. In reality, degradation continues in the absence of DO with alternative oxidants, such as NO_3, SO_4, Fe(III) or CO_2 (Stumm and Morgan 1996). In rivers anoxic degradation is mainly important in the sediment/interstitial (Krejci et al. 2004a). Formed degradation products (such as NH_4) can enter the water column through physical exchange. As a result anoxic degradation processes are mainly included in model applications that use a sediment compartment (see chapter 2.3.4).

Table 2.4: Complexity levels for the representation of degradation of organic matter

Approach	Complexity*
Degradation of organic matter is simulated	1
Distinction between particulate and dissolved organic matter	2
In addition to level 2 distinction between various types of degradability	3
In addition to level 3 degradation in the absence of DO	4

* Level 1 corresponds to the model Qual2E (see Table 2.3)

2.3.2 Acid-base equilibria

The form in which acids/bases are present in water depends on pH. For instance pH determines which shares of total ammonium are in the form of the NH_4^+-ion and of ammonia (NH_3), respectively (Stumm and Morgan 1996). The distinction between the two forms is important in watershed management, since NH_3 is toxic for fish (Krejci et al. 2004b). In most freshwater systems pH is buffered by the carbonate system (dissolved CO_2, calcite), which in turn is influenced by a number of bio-geochemical processes (e.g., assimilation of CO_2 during photosynthesis). The pH and the carbonate system, as well as linked acid-base processes (e.g., NH_4^+/NH_3 oder $H_2PO_4^-/HPO_4^{2-}$) can be considered in water quality models via their equilibrium constants (e.g., Reichert et al. 2001).

Table 2.5: Complexity levels for the representation of acid-base equilibria

Approach	Complexity*
pH/carbonate cycle is not calculated by model	1
Acid-base-equilibria are calculated by the model	2

* Level 1 corresponds to the model Qual2E (see Table 2.3)

2.3.3 Closed mass balances

For nutrient budgets (e.g., for questions related to eutrophication), comparison of simulated results with measurements (e.g., TP and SRP in water column), sediment accumulation and mineralization processes it can be important to follow major elements of biomass C, N, P (and Si if diatoms are considered explicitly) throughout processes and model compartments (Shanahan et al. 1998). To close mass balances, water quality models must fulfil a number of preconditions.

Within the water column, elemental composition of transformable aggregates needs to be considered; e.g., the N and P contents of biomass must be known, since they are released during mineralisation. For nutrients this is fulfilled by most models by using a constant nutrient stoichiometry for biomass, typically the ratio by Redfield (1958). Particularly for oligotrophic systems, nutrient incorporation can vary significantly based on availability. Such varying incorporation is considered for P in Omlin et al. (2001) by introducing a separate state variable for nutrient content in algal biomass.

In many model applications (dead) biomass is represented as BOD, since it is often measured and provides summarized information on degradable organic matter. However, BOD cannot be attributed to biomass, since BOD depends on a number of parameters, such as type of organic matter or present microorganisms (Somlyódy et al. 1998). For closed mass balances the carbon content of dissolved and particulate substances, as well as biological state variables must be assumed to be constant or actively simulated (Reichert et al. 2001). An alternative suggested by (Reichert et al. 2001) is the simulation of the chemical oxygen demand (COD) as a measure for the total organic matter with constant elemental contents. However this is only valid if COD is mainly caused by organic matter.

Closed mass balances require a sediment compartment with a “memory”. Such a sediment compartment allows a realistic representation of important processes, such as substance release or oxygen consumption, as a result of organic material which settled earlier.

Finally, air-water exchange is important for mass balances of some elements, such as O or N.

Qual2E does not use closed mass balances. Although organically bound N and P are considered (as a result of process 14 in Table 2.3), biomass is only represented as BOD. Moreover, settled BOD, N-org and P-org (processes 3, 8 and 11 in Table 2.3) are simply

removed from the system. Sediment release of NH_4 and SRP, as well as sediment oxygen demand are included as constant rates and not connected to actual settled material (processes 4, 9 and 12 in Table 2.3).

Some models close mass balances only for nutrients. As a result Table 2.6 distinguishes whether mass balances are closed for all organic elements C, H, O, N, P (and Si if included) or only a selection, typically N, P or Si.

Table 2.6: Complexity levels for the representation of mass balances

Approach	Complexity*
Mass balances are not closed	1
Mass balances are closed for selected elements (typically N, P or Si)	2
Mass balances are closed for all major elements of organic matter (C, H, O, N, P and possibly Si)	3

* Level 1 corresponds to the model Qual2E (see Table 2.3)

2.3.4 Processes at the sediment

As discussed in chapter 2.3.4, the sediment can have an important impact on river water quality. This impact increases with the sediment surface to water ratio and is therefore particularly expressed in small and medium sized streams. In these smaller types of streams the sediment typically consists of a coarse upper aerobic layer, the so-called hyporheic zone (Shanahan et al. 2001). Nevertheless, sediment can also play an important role in large lowland rivers and lakes (Katsev et al. 2007). The availability of substrate allows much higher densities of microorganisms, which greatly enhances aerobic or anaerobic degradation processes (see also chapter 2.3.1). As a result oxygen consumption (or of other oxidants under anaerobic conditions) and nutrient release in the form of NH_4 or SRP is typically much higher than in the water column. The sediment-water transfer of BOD or nutrients is controlled physically and occurs via diffusive flux, bioirrigation („swirls“ by benthic organisms) or sediment resuspension (e.g., from peak flow or shipping traffic) (Katsev et al. 2007; Krejci et al. 2004a).

In Qual2E sediment release of NH_4 and SRP, as well as DO consumption are incorporated via constant rates, calculated inversely proportional to water depth for each simulated river segment (Table 2.3), notwithstanding organic matter that actually settled (Rauch et al. 1998b). A first step to the inclusion of sediment processes in a water quality model is the introduction of the sediment share for each relevant state variable. Since the sediment state variables are not transported in the river a new sediment compartment needs to be defined for each river segment, thus rendering the model quasi-2-dimensional.

A sediment compartment does not only allow a full mass balance of simulated elements but also a detailed representation of in-sediment processes. These processes can be made dependent on inputs from the water column (such as DO flux or amount of settled

organic material), which in turn allows an improved scenario analysis. Particularly for small and medium sized streams a further differentiation in an upper aerobic and a lower anaerobic zone may be sensible.

For any approach the exchange between two compartments (sediment-water interface or between two sediment layers) needs to be defined. This exchange is mainly physically driven, either via diffusive transport, turbulent transport as a result of bottom-dwelling organisms or sediment resuspension (Cox 2003; Katsev et al. 2007).

Table 2.7: Complexity levels of sediment representation

Approach	Complexity*
Sediment is not represented or strongly simplified (e.g., via constant „sediment oxygen demand“)	1
Sediment compartment with memory	2
Sediment processes (decomposition/mineralisation) are simulated in sediment compartment	3
Sediment processes are distinguished among different sediment layers (= more than one sediment compartment)	4

* Level 1 corresponds to the model Qual2E (see Table 2.3)

2.3.5 Microorganisms

Most redox processes in natural waters are catalysed by microorganisms (Stumm and Morgan 1996). Classical O,N,P-models, such as Qual2E, implicitly include the effect of microbial catalisation by using process rates, as they are observed in natural waters (Shanahan et al. 1998). Moreover process rates are typically made temperature-dependent, to account both for chemical and microbiological thermodynamics. The implicit representation of microorganisms in process rates neglects the presence of bacterially bound biomass.

This is particularly important for microorganisms, which are not always present in high abundance but only start their development under certain conditions. A typical example is nitrification of ammonium, which is not present at high concentrations in most river systems, but can suddenly increase because of anthropogenic impacts (e.g., CSO or manure spills) or during major sediment resuspension. After such an event, nitrifying bacteria need to establish before full rates are reached. As a result populations of nitrifying bacteria are represented as separate state variables (Kirchesch and Schöl 1999; Reichert et al. 2001).

Apart from the delayed build-up of bacteria population, the biomass incorporated in bacteria can make up an important share of total biomass (Kalff 2003), which may in turn be important for overall carbon cycle (and thus oxygen consumption). Since heterotrophic bacterial populations play a major role in WWTP, they are typically considered in corresponding model applications (e.g., Gujer et al. 1999). River water quality models, which consider heterotrophic microorganisms as separate state variables can therefore be linked directly with WWTP models (Reichert et al. 2001).

Summarizing the above, most water quality models that represent microorganisms include one state variable for bulk heterotrophs and one to two groups of nitrifiers. Some models go one step further and distinguish different classes of heterotrophs according to their efficiency of degradation of organic matter. For instance Even et al. (2007a) observed that large microorganisms, which are contained in raw sewage, show higher oxygen decomposition rates than heterotrophs, which are typically found in rivers. If sewage-based organisms enter a river via CSO, they were shown to persist long enough to contribute to a rapid decrease in DO (Even et al. 2007b). Even et al. (2007a) incorporated this in their water quality model by differentiating different size/efficiency classes of heterotrophic bacteria.

While the representation of separate bacterial state variables may make sense, it has to be kept in mind that bacterial populations are usually unknown. As a result, one needs to be careful not to feign high model precision for unknown parameters.

Table 2.8: Complexity levels for the representation of microbial processes

Approach	Complexity*
Microorganisms are only represented implicitly via process rates	1
Groups of microorganisms are represented as separate state variables (heterotrophic bacteria, 1st stage nitrifiers, 2nd stage nitrifiers)	2
Microorgansim groups are split in different classes (e.g., regarding size or efficiency)	3

* Level 1 corresponds to the model Qual2E (see Table 2.3)

2.3.6 Phytoplankton species

Phytoplankton is a major driver of material cycles in natural waters through photosynthetic production of biomass, which in turn is a basis for microorganisms and higher trophic groups, such as zooplankton or fish. Their alternation between photosynthesis during the day and respiration at night basically control the diurnal oxygen regime in lakes and rivers (see chapter 4 for details). The oxygen and phytoplankton levels in the water column of rivers are often reproduced well by models that consider one bulk state variable for phytoplankton, expressed as biomass, incorporated carbon or Chl-A (e.g., Garnier et al. 1999; Reichert et al. 2001). However, when using one bulk phytoplankton variable, problems may occur in the transfer from one river to another, since growth rates and nutrient preferences differ significantly among phytoplankton species (Kalff 2003). As a result, models with one bulk phytoplankton variable must typically be calibrated for a specific water body or even for seasonal changes (e.g., Mieleitner and Reichert 2006; Reichert 2001).

An alternative approach – followed for instance by the model Qsim (Schöl et al. 2002) – is the introduction of different phytoplankton groups, which can increase model transferability. However, even Qsim, which distinguishes three phytoplankton groups, was shown to improve significantly with calibration (Rode et al. 2007). Consequently, the

main reasons for inclusion of more than one phytoplankton state variable are (i) if phytoplankton groups with very different characteristics succeed each other or (ii) if the phytoplankton composition is an aim of the simulation. For instance the latter can be the case, if harmful algal blooms are to be predicted. However, predictions at the species level are hampered by the hundreds of species present in one water body and their numerous interactions (Kalff 2003). At most, models may be able to predict the probability for the development of a specific phytoplankton group (e.g., Roelke et al. 1997). Nevertheless, multi-species approaches are mostly followed for scientific questions and do not seem reliable enough for management questions.

Table 2.9: Complexity levels of the phytoplankton representation

Approach	Complexity*
Phytoplankton is aggregated in one state variable	1
Different groups/species of phytoplankton are represented as separate state variables	2

* Level 1 corresponds to the model Qual2E (see Table 2.3)

2.3.7 Benthic algae and macrophytes

Benthic algae and macrophytes may contribute to carbon assimilation to a similar order of magnitude as phytoplankton (Kalff 2003). Benthic algae appear in highest densities on rocky bottoms and are not expected on muddy surfaces (Vanrolleghem et al. 2001). However, benthic algae were also observed on sandy sediments, consolidated mud and artificial bank structures on the lower River Spree, upstream of Berlin (pers. comm. J. Köhler). The importance of benthic phytoplankton and macrophytes is generally decreasing with increasing water depth and turbidity. Similar to sediment borne processes, benthic algae cannot be represented as a state variable in the water column of a river but must be assigned to the each river segment. Reichert (2001) introduced sessile organisms per unit river length to be able to account for water level fluctuations. Other applications assume a constant areal density of sessile organisms, which can differ between simulated river segments (Schöl et al. 2002).

Table 2.10: Complexity levels of the representation of macrophytes and benthic algae

Approach	Complexity*
Benthic algae or macrophytes are not considered by the model	1
Benthic algae and/or macrophytes are considered by the model	2

* Level 1 corresponds to the model Qual2E (see Table 2.3)

2.3.8 Organisms of higher trophy

In simpler O,N,P models phytoplankton is controlled via respiration and sedimentation (e.g., Qual2E: Brown and Barnwell 1987) and additionally via a general death rate (e.g., WASP6: Wool et al. 2001). In river systems, where phytoplankton is mainly controlled by light or nutrient availability or physical cell damage, a bulk death rate may provide good results. However, if consumers, such as zooplankton or sessile filter feeders (i) occur at significant populations and (ii) change in abundance over the simulated time, a dynamical representation of consumer control will be necessary to reproduce phytoplankton correctly (Vanrolleghem et al. 2001). For instance, many temperate freshwater systems show two distinct phytoplankton peaks, which are separated by a so-called clear-water phase, which is created by zooplankton grazing (Kalff 2003; example in Figure 2.1).

To account for such dynamic predator-prey interactions many models, which aim at lakes and large rivers, include zooplankton (e.g., Qual2K: Chapra et al. 2007). One further step is the representation of sessile filter feeders, such as freshwater mussels, which may have a significant impact on river phytoplankton (Schöl et al. 1999; Schöl et al. 2002).

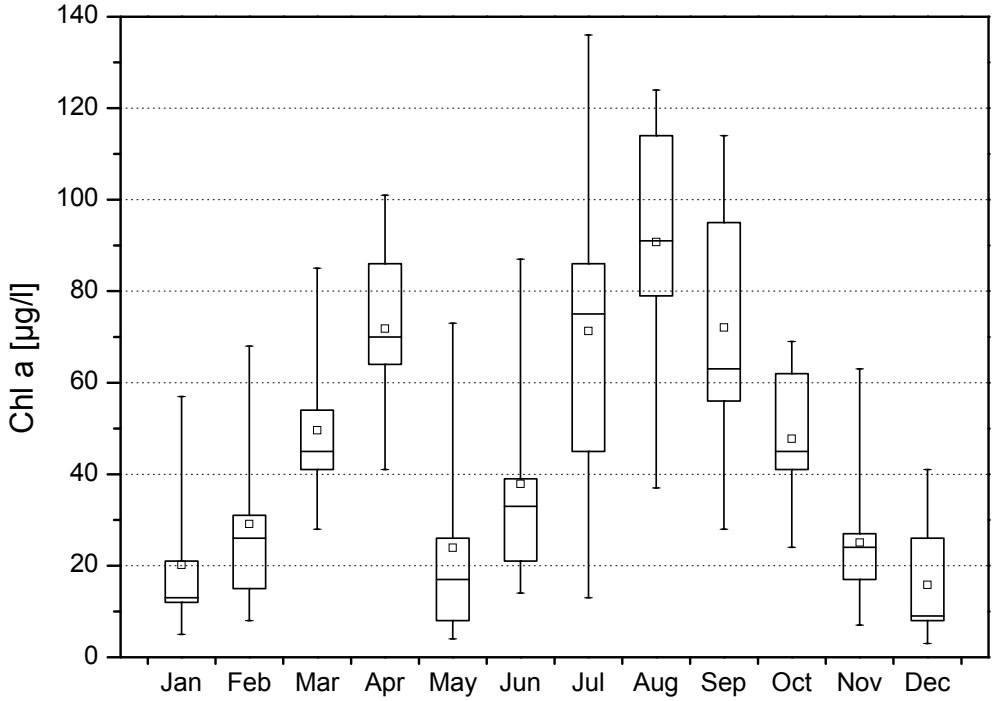

Figure 2.1: Chlorohyll-A dynamics of the River Spree in Berlin (Station Mühlendamm), based on measurements by the Senate of Berlin from 1995 to 2007. Boxes contain monthly 50 %-quantiles, lines in boxes are medians, squares are arithmetic means and whiskers are maxima/minima.

For the most dominant mussel species, *Dreissena polymorpha*, the representation is highly complex, since their adult forms are attached to the bottom similar to benthic algae (see chapter 2.3.7) but they reproduce via planktonic life stages, which are

transported downstream before becoming sessile. Schöl et al. (2002) have incorporated this reproduction cycle by assuming settlement of planktonic larvae after a fixed time interval.

Whereas sessile filter feeders are important in many rivers, zooplankton becomes more dominant with decreasing flow velocities and increasing water depth. Consequently, the representation of both sessile and planktonic consumers are only sensible in intermediate rivers. In general, the explicit incorporation of consumers may be necessary to reproduce full dynamics in biological and chemical water quality. However, it needs to be kept in mind that data availability on consumer biomass often limits a correct implementation. Given the additional uncertainty with consumer conversion rates during feeding (Mieleitner and Reichert 2006), the simulation of consumers is only suggested if sufficient data is available for boundary conditions and calibration.

Table 2.11: Complexity levels of the representation of consumer species

Approach	Complexity*
Consumers are included implicitly via death rate of phytoplankton	1
Zooplankton is simulated as separate state variable(s)	2
Zooplankton and benthic consumers are simulated	3

* Level 1 corresponds to the model Qual2E (see Table 2.3)

Chapter 3
Model applications

3.1 Examples of existing model applications

In the following section several popular river water quality models are presented to exemplify the range of complexities and different focuses of current applications. The presented models have been chosen, based on their popularity in application and scientific literature (Qual2K, WASP7, CE-QUAL-W2, MIKE11, RWQM1), as well as their specific use for CSO assessment (RIVE, Qsim). Moreover the model Infoworks RS is shown, a relatively recent water quality application by Walingford Ltd.

The list of presented models is incomplete by necessity. In particular, there are many tailor-made applications, which put together published equations to answer a specific question. For instance, Kopmann and Markofsky (2000) coupled the hydraulic code of Telemac with phytoplankton equations from various models, including Qual2K for Lake Müggelsee in the East of Berlin. Another model, which is not considered in the following, is the ATV-Water quality model (ATV 2002), which was established by the German Association for Water, Wastewater and Waste for applied question, such as the impact sewage effluents. The ATV-Water quality model is based on an earlier version of Qsim (which is discussed below). Moreover, developer support has ceased (pers. comm. J. Köhler).

For each of the presented models, complexity is assessed as discussed in Chapter 2. A summary of model complexities is given in Table 3.1. Apart from complexity itself the possibility to adapt model complexity and structure to specific questions is assessed.

Table 3.1 shows that each model has certain aspects, which are dealt with in great detail. For instance,

- Qsim is most detailed regarding biological parameters, which makes it well suited to represent seasonal changes in river water quality, including the impacts of phytoplankton succession, seasonal growth of benthic algae and macrophytes, as well as filter feeders.
- RIVE focuses particularly on different size classes of microorganisms, which may be critical when judging the effect of sewage inflow.
- WASP7 has the most detailed sediment compartment, which enables the representation of sediment feedback, increase of sediment thickness, compaction and seasonal erosion, which may be critical for channels used for shipping or the assessment of pollution with suspended particles.
- RWQM1 takes great care to consider full mass balances by following each chemical element throughout the river system.

On the other hand, none of the model applications reaches highest complexity level throughout. Although complexity can be adapted to a certain extent in all applications, only the tools Aquasim (for RWQM1) and Ecolab (for MIKE11) allow full and simple (without having to change the source code) control of processes, process stoichiometry and process rates.

Table 3.1: Complexity levels of selected model applications

Water quality model	Complexity per category										Sum	Can complexity be adapted by user?
	Hydraulic model Table 2.1	Transport model Table 2.2	Degradation of organic matter Table 2.4	Acid-base equilibria Table 2.5	Mass balances Table 2.6	Sediment Table 2.7	Microbial processes Table 2.8	Phytoplankton Table 2.9	Macrophytes and benthic algae Table 2.10	Consumer species Table 2.11		
Maximum complexity	*4*	*2*	*4*	*2*	*3*	*4*	*3*	*2*	*2*	*3*	*29*	
Qual2K	1	2	4	2	1	1/4[a]	1	1	2	1	16/19	partly
WASP 7 with hydraulic model EFDC	4	2	4	1	3[b]	4	1	1	2	1	23	partly[c]
CE-Qual-W2	4[d]	2[d]	3	2	1[e]	1[f]	1	2	2	2	20	partly
Ecolab (EU Template with sediment)/MIKE 11	4	2	1	1	3[b]	4	1	1	2	1	20	yes
RWQM No 1 with hydraulic model of Aquasim	3	2	4	2	3	4	2	1	1[g]	2	24	yes
Rive/Prose	4?	1?	3	1	3[h]	3	3	2	1	2	23	?
Qsim 10.0 with hydraulic model Hydrax	4	1	3	2	2[j]	1	2[k]	2	2	3	22	partly
Infoworks RS	4	2	4	1[m]	2	4[n]	1	1	2[o]	1	22	partly

Cells, which are shaded in grey indicate maximal complexity

[a] Qual2K uses a 2-layer sediment with detailed sediment processes, but calculates average fluxes based on currently settling material without sediment memory

[b] for C, N and P

[c] according to manual WASP can be individually extended by own functions, but in application it was impossible to find out how

[d] CE-QUAL-W2 is two-dimensional and explicitly includes longitudinal and vertical turbulence. As a result a "longitudinal dispersion" approximation is not necessary

[e] Mass balances are followed for N, P, Si and C, but sediment compartment has no memory (though change in sediment stochiometry is calculated based on settled material)

[f] sediment stochiometry is followed, based on settled material and release to the water column occurs with a first order decay rate, however only if water at sediment interface is oxic. A full sediment compartment with diagenetic processes is announced by programmer

[g] not in original model description, but in example how model can be extended by Reichert (2001)

[h] considered for N,P,C and Si

[j] only for Si

[k] for 1st stage nitrifiers and 2nd stage nitrifiers, heterotrophic bacteria are simulated but initial condition is calculated from BOD_5 and COD.

[m] hydrogen ions are simulated as a conservative tracer

[n] three sediment compartments, recent (fluffy) layer, consolidated layer and pore water within consolidated layer

[o] macrophytes use dissolved nutrients in pore water (via roots)

3.1.1 Qual2K

General

Qual2K (Chapra et al. 2007) is the successor of the Qual2E model (Table 2.3). As Qual2E, Qual2K has still reference status in river water quality modelling. It is developed further under the auspices of S. Chapra at Tufts University in Medford, USA. The distribution is organized by the US EPA.

The model is freely downloadable from the US EPA webpage. It contains an Excel spreadsheet for data input and post-processing and a Fortran-based model engine. The source code is open and can be changed by the user.

Documentation

There is an excellent documentation of the model, from the conceptual level to the mathematical process formulation. As a result, the model equations could be implemented easily in any other model framework. Several of the other presented models have incorporated selected process formulations from Qual2K.

Complexity

The model aims at applied users rather than a scientific audience. Consequently, summing up complexity levels, it is the least complex model in Table 3.1.

Its major shortcoming is the hydraulic component, which allows only steady state situations. Thus, variable flow (e.g., from event-based lateral inflows) cannot be simulated, which limits the model to large streams and relatively short periods.

Most of the water quality components are also of lower complexity. An interesting approach is used for sediment processes. On the one hand sediment diagenesis is simulated at great detail in a two-layer sediment. On the other hand the sediment does not have a memory and equilibrium fluxes are calculated for each time step, based on current sedimentation (Chapra et al. 2007). Benthic algae are also simulated in detail covering full mass balance for major nutrients (Chapra et al. 2007). As a result, the bethic algal approach of Qual2K is often used as a reference. For instance the approach was incorporated in WASP7 (Ambrose et al. 2006).

Adaptable by user?

Most of the model parameters can be changed by the user in the Excel spreadsheet. Complexity of model structure is only adaptable for a few processes, such as reaeration or light absorption. Processes themselves cannot be changed easily. However, since the source code is accessible, additional processes can theoretically be added.

Typical applications

Qual2K is aimed primarily at practitioners and can be used with relatively little prior knowledge. It is mainly applied in the US for first assessment of long-term change in relatively constant water bodies. There are few scientific references of the use of Qual2K. However, single Qual2K processes are often incorporated in other models, given their good documentation.

3.1.2 WASP7

General

WASP (Ambrose et al. 2006; Wool et al. 2001) stands for “Water quality Analysis Simulation Program”. WASP is suggested by the US EPA for more complex questions. Development is located at the Environmental Research Laboratory in Athens, USA.

WASP7 is freely downloadable from the US EPA webpage. It comes with an own user interface. The Fortran-based source code is open and can be changed by the user.

Similar to Qual2K, WASP7 has only a very basic hydraulic model included. However, hydraulic data from any model application can be used as an input to WASP7. The format for hydraulic input data was adapted to the 3D US EPA hydraulic model EFDC (Environmental Fluid Dynamics Code) to allow direct link (Craig 2004; Hamrick 1992). In combination with EFDC (or any other 3D hydraulic model) WASP7 can also simulate water quality in 3D.

Documentation

There is a documentation of the model version WASP6 (Wool et al. 2001). It covers most of the processes used by the model but lacks some stoichiometric links and latest model formulations. For instance the distinction of CBOD variables with different degradability are included in the model, but not covered in the manual. As a result implementation of the WASP7 process equations in a different model may not be straight forward.

Complexity

The model aims at applied users as well as a scientific audience. It represents a balanced level of complexity for many applied water quality questions. It omits acid-base equations and simplifies biology to one phytoplankton species, one benthic algal species without simulating consumer species (a time-dependent zooplankton population can be set as a boundary condition). In contrast, processes which are often of interest to decision makers, such as degradation of organic matter or sediment build-up/erosion are resolved at greater detail. For instance the sediment compartment does not stop at simulating diagenetic processes but includes growth, compaction and erosion of sedimented matter.

Adaptable by user?

Most of the model parameters can be changed by the user in the interface. According to Wool et al. (2001) processes can be changed and new processes added to the model. However, the manual does not explain how this can be done and even a detailed scrutiny of the interface did not provide an answer (pers. comm. J. Benz). Theoretically, adaptations can be directly made to the source code, but the interface is not open source. Moreover, processes are not fully documented, which may complicate intervention in the source code.

The main advantage of WASP7 is that different levels of complexity are pre-defined. For instance biological degradation can be simulated in four different complexities, from the classical Streeter-Phelps-equations to a complex non-linear approach. That way users can test which level of complexity is necessary to represent the aimed at aspects of their system, without having to change the whole model structure by hand. This is a marked

difference to other applications, such as RWQM1, where simplifications are suggested but must be implemented by the user (Vanrolleghem et al. 2001).

Typical applications

WASP is used frequently for applied water quality questions in rivers and estuaries. The adaptable complexity without detailed know-how on model processes is a major advantage for applied users. Nevertheless WASP is also used for scientific questions (e.g., Lindenschmidt 2005).

3.1.3 CE-QUAL-W2

General

CE-QUAL-W2 (Cole and Wells 2008) is another frequently used hydraulic and water quality model in the USA. It is developed by the US Army Corps of Engineers and distributed through US Geological Survey (USGS).

As WASP and Qual2K, CE-QUAL-W2 is freely downloadable. It comes with a pre-processor and a post-processor for the Fortran-based model engine. The source code is open and can be changed by the user. CE-QUAL-W2 has an active user community supplying extension modules online.

In comparison with Qual2K and WASP7, CE-QUAL-W2 addresses more advanced users who are familiar with Fortran. Although CE-QUAL-W2 can be used for one-dimensional river systems it aims at two-dimensional (flow direction and depth) simulations, which renders the hydraulic model more complex.

Documentation

There is an excellent documentation of CE-QUAL-W2 (Cole and Wells 2008), which covers both mathematical processes, user instructions and Fortran implementation. Since all the processes used are referenced and process rates for a variety of surface water systems are cited from the literature, the manual may also be used as a basis of process equations or rates for different models.

Complexity

The hydraulic model is markedly more complex than for one-dimensional models, since turbulence terms are considered in addition to classical St. Venant equations. The water quality model is rather at the upper end in terms of complexity, with one important exception. The sediment compartment does not have a memory, it simply changes its stoichiometry (ratio N:P:Si:C) based on settling material. The release from the sediment is dependent on this stoichiometry, water temperature and oxygen content in the water column above the sediment. Consequently, mass balances cannot be closed, although this would be possible based on process formulation in the water column. Moreover, decay of organic matter in the water column and the sediment stops under anoxic conditions. The limitations have been acknowledged by Cole and Wells (2008) and an updated, fully functional sediment compartment is announced for the next model version.

Adaptable by user?

Model complexity can be adapted, since state variables to be used must be defined by the user. For instance, if different CBOD variables are used, user-defined degradation and settling rates must be set for each CBOD variable. Similarly some model variables can be omitted. However, if for instance zooplankton is neglected, death rates of phytoplankton must be adapted by the user.

The well documented Fortran setup allows the advanced user to change model structure individually.

Typical applications

CE-QUAL-W2 is the state-of-the-art water quality model for reservoir simulation and most processes are adapted to be able to represent important reservoir aspects (such as variable withdrawal depth, water level fluctuations, etc.). Modules for typical reservoir management measures are constantly developed by an active community (e.g., for artificial oxygenation: McGinnis and Little 2002).

Nevertheless, CE-QUAL-W2 is also used for river simulation (Norton and Bradford 2009), since hydraulics were adapted to cope with slope in model version 3 (Wells 2000).

3.1.4 ECO Lab/MIKE11

General

ECO Lab is a water quality module, which can be coupled with various MIKE models. Since the focus of this report are one-dimensional river water quality models, we discuss ECO Lab coupled with MIKE11 (DHI 2008a).

MIKE is one of the most popular commercial water modelling applications. It is distributed by DHI. It can be extended with a number of separately charged modules, such as Ecolab. In 2008 the combination MIKE11/ECO Lab cost 20.500 € (MIKE software catalogue 2008).

ECO Lab is a toolbox with several pre-defined variables (such as water depth or sediment surface), which allows the user to set up an individual water quality model on top of the hydraulic model MIKE11. To aid the user at water quality modelling, pre-defined eutrophication (EU) (DHI 2007) and water quality (WQ) (DHI 2008b) templates are included with ECO Lab.

Documentation

Detailed user manuals are available for MIKE11, ECO Lab, as well as pre-defined EU and WQ templates. For the templates detailed process equations and process parameters are documented (DHI 2007, 2008b).

Complexity

The speciality of MIKE applications is clearly hydrodynamics. For instance, special modules are offered for MIKE11 for dam break or flood simulations.

The available EU template is of average complexity (Table 3.1). Exceptions are the sediment compartment and benthic algae and plants. The sediment compartment distinguishes between an upper aerobic and a lower anoxic layer. In contrast to the water column, degradation of dead organic matter is considered in the lower sediment.

Both, benthic algae and rooted macrophytes are represented in the EU template. It is particularly adapted to frequent macrophyte species, such as eelgrass, and covers its seasonal growth and die-off.

Adaptable by user?

All the water quality processes can be freely adapted by the user. Consequently complexity can be adjusted to specific questions. Moreover, any published processes from other models can be incorporated in the user interface. This makes ECO Lab a powerful tool for many applications. However, advanced know-how on processes in surface water ecosystems are required to set up a sensible model structure. For the available templates, some complexity-levels are pre-defined. For instance, the user can choose whether to include complex sediment and/or macrophyte representations.

One further advantage are the built-in calibration routines, which allow calibration even for users without in-depth numerical experience.

Typical applications

The typical applications of MIKE11 are still in the hydraulic sector, mostly for flood prediction and assessment of hydraulic engineering impacts in rivers. The water quality module ECO Lab seems promising, mainly because it provides the user full control of model structure. However, MIKE11 and/or ECO Lab do not appear in scientific literature for water quality applications.

3.1.5 RWQM1

General

The River Water Quality Model No 1 or short RWQM1 was developed by the IAWQ (today part of IWA) “Task Group on River Water Quality Modelling”. Its goal was the establishing of a river water quality model, which can be coupled with the IAWQ Activated Sludge Model, which was already in use for WWTP simulation. In a first step, status quo and main problems of river water quality modelling was assessed in a series of publications (Rauch et al. 1998b; Shanahan et al. 1998; Somlyódy et al. 1998). In a second step the approach for RWQM1 was defined (Shanahan et al. 2001) and a fully documented set of water quality equations developed (Reichert et al. 2001). Moreover the authors provided a manual for adapting the model complexity to specific requirements (Vanrolleghem et al. 2001) and exemplified the use of RWQM1 in two case studies (Borchardt and Reichert 2001; Reichert 2001).

The RWQM1 is certainly the most scientifically based model of Table 3.1. One speciality of RWQM1 is that it simply consists of a set of equations without a specific numerical solver. In the two case studies above it was applied in the toolbox Aquasim (Reichert

1998), for which the RWQM1 implementation is freely available online. The Aquasim toolbox is available for 1300 € for commercial use.

Documentation

The RWQM1 process equations are fully documented in Reichert et al. (2001) and can be readily implemented in any model/solver. In the same publication, typical process rates and stoichiometry are suggested. The toolbox Aquasim is fully documented in Reichert (1998).

Complexity

The hydraulic model within Aquasim does not allow the solution of the full St. Venant equations. Nevertheless, the implemented diffusive wave approximation allows a good simulation of most river situations, with the exception of flood waves (see Chapter 2.1).

The RWQM1 allows for a high complexity of biogeochemical transformation processes. It is less complex, however in terms of biological representation. It only includes one phytoplankton and one zooplankton species without including benthic organisms.

Adaptable by user?

Similarly to ECO Lab, Aquasim allows the user full control of all the water quality processes. Consequently complexity can be adjusted to specific questions. Moreover, any published processes from other models can be incorporated in the user interface. For RWQM1 Vanrolleghem et al. (2001) has made specific suggestions on how the model can be simplified for specific questions. For instance Reichert (2001) has shown how the model can be adapted for a study, where oxygen, ammonium and nitrite balance in the River Glatt was of interest. In the study consumer species were omitted. All other biological state variables (heterotrophic and nitrifying bacteria, as well as phytoplankton) were considered as constant over the time of simulation and estimated to achieve a best fit to observations. Finally, carbon equilibria were not simulated. On the other hand biofilm (benthic algae and bacteria) were introduced in a second step to estimate total river respiration.

Typical applications

Whereas Aquasim has been used frequently since its development in 1994 (e.g., Koch et al. 2000; Meier et al. 2003; Reichert 1994; Schmid et al. 2007), RWQM1 regularly appears in scientific publications since 2005 (e.g., Duc et al. 2007). The clear documentation of RWQM1 has also led to its use for applied questions, typically in a simplified form (e.g., Brehmer et al. 2009).

3.1.6 RIVE/PROSE

General

The PROSE model was explicitly developed for the River Seine (e.g., Even et al. 2007a) and applied (among other uses) for the assessment of CSO impacts (Even et al. 2007b). The water quality component within PROSE is based on the conceptual model RIVE (Garnier et al. 1995).

RIVE was originally developed by G. Billen at the “Université Libre de Bruxelles” in Belgium (Garnier et al. 1995) and has since been used as a water quality module in models, such as PROSE or RIVERSTRAHLER (Garnier et al. 1999).

The PROSE and the RIVE model are non-commercial products, which are used for scientific questions and by public entities. However, they are not simply available to interested users.

Documentation

The RIVE processes are described in text and schematic graphs in several publications (e.g., a schematic graph is given in Garnier et al. 1999). However, process equations, stoichiometry and rates are not documented in detail. As a result processes from RIVE cannot be implemented in other model applications.

Complexity

The hydraulic model within PROSE is not clear. According to Even et al. (2007a) it is based on the Saint Venant equations, but they do not mention if any simplifications have been used. Similarly it is not clear whether dispersion is considered.

The complexity of the water quality model RIVE can be assessed, based on the schematic overview in Garnier et al. (1995). Overall complexity is quite high with full mass balances for several elements, distinction of several types of dead organic matter, two phytoplankton species (diatoms and green algae) and one zooplankton species. A particularity in RIVE is the differentiation of three mechanistic steps of photosynthetic assimilation. It is not clear why such a complex formulation was chosen by the developers, since the incorporated sub-steps cannot be easily followed with measurements (e.g., the contribution of “intracellular low-molecular-weight organic metabolites” to algal biomass).

On the other hand, RIVE was extended to include several groups of heterotrophic microorganisms to account for the fact that bacteria in CSO may have a large impact on degradation of organic matter (Even et al. 2007b).

Adaptable by user?

Since the model is not documented and not available it is not possible to judge user control at the moment.

Typical applications

PROSE was specifically developed for the Seine River and used to address impacts of WWTP effluents and CSO.

3.1.7 Qsim/Hydrax

General

The hydraulic model Hydrax and the coupled water quality model Qsim (Kirchesch and Schöl 1999) were developed by the German Federal Institute of Hydrology (BfG) in 1979 with the aim to assess the environmental impacts of hydro-engineering measures on

rivers and channels. Since then it has been further developed and is probably the most widely applied water quality model for German surface waters.

Similar to PROSE, Qsim is a non-commercial product, which is not publicly available. However it can be used in cooperation with BfG.

Documentation

Although some process formulations are described in detail (Kirchesch and Schöl 1999; Schöl et al. 1999; Schöl et al. 2002), full model documentation is not available. Nevertheless, the release of a documentation is announced for October 2010 (pers. comm H. Fischer).

Complexity

Based on the existing documentation and the local availability of Qsim, model complexity can be judged.

The hydraulic model Hydrax solves the full St. Venant equations. Moreover a great number of special features, such as macrophyte cover or spur dykes, which affect river hydraulics, can be activated.

Since Qsim aims mostly at applied questions, full mass balances are neglected and organic matter is represented as different types of CBOD. Moreover the sediment representation is simplified to sediment oxygen demand and the leaching of ammonium, which only depend on water depth. On the other hand Qsim covers a great number of biological parameters, including both planktonic forms that move with the water (green algae, diatoms, cyanobacteria, rotifera and nanoflagellates) and sessile species (benthic algae, macrophytes and filter feeders). A particular feature is the inclusion of sessile mussels, which have both planktonic and sessile life stages (Schöl et al. 1999; Schöl et al. 2002).

Adaptable by user?

Several modules of the hydraulic and the water quality model can be turned on/off by the user (e.g., spur dykes or mussel modules). Moreover, several process rates can be changed in the user interface. However, the user cannot change or implement processes.

Typical applications

Hydrax/Qsim was applied for more than twenty German river systems, among them also the River Spree. Given the applied focus of the model, the number of scientific publications is small in comparison.

3.1.8 Infoworks RS

General

Infoworks CS (Collection system) is a frequently used commercial sewer model (WSL 2004), which is used for CSO simulation in Berlin (e.g., Schroeder and Pawlowsky-Reusing 2005). Infoworks RS (River System) is a relatively recent product, which allows the simulation of the receiving river or channel. It contains both of a hydraulic and a

water quality sub-model. Infoworks RS is run independently. A standard coupling with other Infoworks models, such as Infoworks CS, is not provided.

Infoworks RS is a commercial product distributed by UK-based Wallingford Ltd. Price depends on the number of nodes and varies between free of charge (250 nodes version) and 43,000 € (unlimited nodes, OpenMI interface, other advanced options).

Documentation

Most process formulations are described in help file of the software, default values for the various parameters (including process stoichiometry) can be seen in the model interface.

Complexity

The hydraulic model solves the full St. Venant equations. Water chemistry has an average complexity, whereas planktonic community is simplified with one phytoplankton species and no consumers. On the other hand, sediment-based benthic algae and macrophytes are simulated. In general, the sediment component is quite complex, with three compartments, an upper fluffy layer, a lower consolidated layer and pore water enclosed in the latter. Whereas the upper layer is in direct contact with the water column, the lower layer has only an impact when sediment is resuspended or via nutrient uptake of macophytes from pore water.

Adaptable by user?

The water quality model is structured in a modular way. Basically all modules, such as phytoplankton or macrophytes, can be turned on and off by the user, with the limitation that some more complex modules require simpler ones. For instance, sediment module can only be turned on if dissolved oxygen module is active. Whereas process formulations are fixed, transformation rates can be adapted by the user. Moreover, conservative or decaying pollutants, which do not interact with other variables can be added.

Typical applications

Whereas Infoworks CS is widely applied, no references for the quality model of Infoworks RS were found.

3.2 Integration of water quality models with urban drainage models

If - in urban water management - the impact of discharges from the wastewater system (waste water treatment plants, combined or separate sewer system) on the receiving water (in German called “immissions”) should be considered to derive optimal management strategies, it is necessary to carry out an integrated analysis of the technical and the natural system. For scenario analysis integrated models can be applied. According to the U.S. EPA (2008) integrated modelling may include

- modelling of multiple pollutants and sources (stationary and mobile sources or point sources and non-point sources) within a single medium,

- modelling multiple pollutants across multiple environmental media, pathways, and/or receptors and multiple ecosystem endpoints,
- integrating models across the source to dose continuum,
- modeling across different spatial and temporal scales and
- integrating bio-geophysical models with economic and social models.

The sub systems, system processes and substances to be included in integrated models as well as the complexity of model approaches strongly depend on the objectives of the study, the evaluation criteria and the availability of data. Even more than in usual modelling studies it is necessary to reduce the complexity and the size of integrated models as far as possible (Rauch et al. 1998a; Rauch et al. 2002).

When linking different models together, corresponding variables, which may be defined differently in the different models, need to be related to each other. For example, if a model, which uses COD concentrations as a measure for organic loads, is linked to a model, which is based on BOD concentrations, it is important to define, how the different variables can be transformed from one representation into the other. It has to be paid attention when different models use variables of the same name but with a different meaning. Often, conversion factors are defined, which are applied at the interface between two linked models. It is also important to consider the different spatial or temporal discretisations that are applied in the different models.

Models can be linked sequentially or parallely (for detailed description of model integration approaches see Sonnenberg 2009). Parallel integration is required if two models need to communicate during simulation. In the case of CSO impact assessment on the River Spree, a sequential approach with an interface between the urban drainage model, the hydraulic river model and the biogeochemical model is sufficient, since no feedback is expected between the models.

First simple integrated models for the urban environment have been introduced by Beck (1976), Durchschlag (1990) and Ostrowski et al. (1989). Later on, Clifforde et al. (1999), Erbe (2004) and Meirlaen (2002) coupled detailed models of the natural and technical subsystems. Commercial model platforms currently used for integrated modelling are e.g. SIMBA (Schütze and Alex 2004) and WEST (Vanhooren et al. 2003).

It is not straight forward to judge ability of existing water quality models to be integrated with an urban drainage model. Three different levels of integrability can be distinguished:

1. A first minimum requirement is the possibility of external parameterization of simulation runs (e.g., via batch runs).
2. Integration is significantly easier if functions within the simulation engine can be accessed separately from an external program (e.g., via application programming interface (API), see Sonnenberg 2009 for details).
3. Recently the open modeling interface (OpenMI), a standard interface for model linking, was developed by the EU. It allows a standardized way of model linking and is already available for some model applications (see Sonnenberg 2009 for details).

Among the models in Table 3.1, Aquasim/RWQM1 (level 1), Infoworks RS (level 2 and 3) and Ecolab/Mike 11 (level 3) allow the integration with a different model. In addition open source models (Qual2K, WASP7, CE-QUAL-W2) can theoretically be accessed via source code. Finally, any model with a model interface can be integrated with a different model with the help of the developer. It has to be kept in mind that even if a model application allows integration based on levels 1 to 3, assistance from the developer may be needed. For instance for OpenMI, available link functions need to be assessed in detail, before judging integrability (Sonnenberg 2009). In summary, integrability can only be judged in detail when tested.

Chapter 4

Model representation of the ammonium and oxygen budget of rivers after combined sewer overflows

The following section focuses on ammonium and DO in rivers, given their importance for aquatic organisms during the impact of CSO (Leszinski et al. 2007). Most relevant processes are identified (i) based on values and empirical relationships from literature and (ii) based on steady-state ammonium and DO sensitivities, calculated using well documented RWQM1 equations. Both (i) and (ii) are based on characteristic values for the River Spree in Berlin, summarized in Table 4.1. In a second step, existing approaches and mathematical formulations are given for identified relevant processes.

4.1 Ammonium

Ammonium (NH_4) is formed during anaerobic degradation of organic matter, a process which occurs in most river sediments. Through diffusion at the sediment-water interface, NH_4 can enter the water column of a river. However, since NH_4 is subject to nitrification and algal uptake (see below) in the water column, concentrations in rivers are typically low. For instance, an average concentration of 0.06 mg N-NH_4/L is measured in the River Spree in the absence of CSO (Table 4.1). In contrast, concentrations are expected in the range of 1.6 mg N-NH_4/L after CSO (Table 4.1). Based on these data, important NH_4 concentrations in the River Spree are only expected as a result of external sources. Consequently, we neglect potential NH_4 sources in the river and focus on removal processes, the so-called self-purification of river systems.

Main potential removal processes are nitrification and incorporation by algae or macrophytes. Plants and algae preferentially take up NH_4 rather than the oxidized NO_3 (Kalff 2003). Maximally, all the phyotosynthetically assimilated nitrogen could be taken from the NH_4 pool. For phytoplankton, this leads to estimated NH_4-removal of 0.002 mg-N/L/d for the given Chl-A level of the River Spree. This value compares well with steady-state uptake calculated with RWQM1 equations, which take into account that both NH_4 and NO_3 are used as nutrients (Table 4.2). For the River Spree, macrophytes and benthic algae were neglected, given the steep banks and turbid water.

Nitrification is the oxidation of NH_4, which is microbiologically-catalysed in river ecosystems:

$$NH_4^+ + 2\ O_2 \rightarrow NO_3^- + H_2O + 2\ H^+ \qquad 4.1$$

In reality reaction 4.1 takes place in two steps involving two types of bacteria, with NO_2^- as an intermediary product (Kalff 2003). According to 4.1, full nitrification takes about 4 mg DO for the oxidation of 1 mg NH_4. Since nitrifying bacteria require both NH_4 and DO, they typically occur in natural ecosystems at the interface between oxic and anoxic waters in or at the sediment (Kalff 2003). Even in a river with generally high NH_4 levels, Pauer and Auer (2000) found populations of nitrifying bacteria to be five orders of magnitude higher at the sediment surface than in the water column.

Table 4.1: Characteristic values for the River Spree and CSO

Parameter	Unit	Lowland River	CSO		Average mix [m]
		Mai-Sep	min	max	
Ammonium	mg-N/L	0.06 [a]	1.4 [b]	24 [b]	1.6
Nitrate	mg-N/L	0.40 [a]	0.1 [b]	8.45 [b]	0.9
Nitrite	mg-N/L	0.02 [a]			
Soluble reactive phosphorus	mg-P/L	0.10 [a]	0.9 [b.c]	25.4 [b.c]	1.7
DOC	mg/L	8.2 [a]	3.6 [b]	58.1 [b]	11.0
TOC	mg/L	11.2 [a]	25.9 [b]	78.5 [b]	16.3
BSB5	mg-O2/L	4.0 [a]	7 [b]	320 [b]	23.7
CSB	mg-O2/L	38.8 [d]	38.0	857.0	98.1
DO	mg/L	8.4 [a]	0 [e]	0 [e]	7.3
pH	-	8.0 [a]	6.63 [b]	7.35 [b]	7.9
T	°C	20.0 [a]			
Heterotrophic bacteria	mg-DM/L	0.13 [f]	1.88 [f]	2.31 [f]	0.4
Nitrifying bacteria in water	mg-DM/L	0.000001 [g] 0.001 – 0.01 [h]	0.0002 [h]	0.04 [h]	0.005
Nitrifying bacteria at sediment	mg-DM/L	0.01 [g]	-	-	0.01
Phytoplankton	mg-DM/L	2.8 [a,j]	-	-	2.4
Chl-A	µg/L	67.7 [a]	-	-	57.8
Zooplankton	mg-DM/L	1.5 [a,k]	-	-	1.3
Depth of the River Spree	m	-	-	-	3
Flow speed in summer	m/s				0.05
Solar radiation	W/m^2	-	-	-	436 [n]
Wind speed	m/s	-	-	-	2 [o]

[a] River Spree 2003 to 2007 directly upstream of reach with CSO impact (measuring station Baumschulenweg, unpublished data, Berlin Senate 2007)
[b] Based on databases by Uhl (2003) and Brombach and Fuchs (2002)
[c] values for TP, since SRP is rarely measured
[d] calculated from TOC, assuming stoichiometry from Reichert et al. (2001)
[e] CSO is assumed to be anoxic
[f] values from Seidl et al. (1998) for the River Seine, converted to DM based on Reichert et al. (2001)
[g] values from Pauer and Auer (2000), assuming cell diameter of 1 µm
[h] values from Brion and Billen (2000), converted to DM based on Reichert et al. (2001) assuming 10 % raw sewage in CSO
[j] measured biovolume, converted to DM based on Kalff (2003) and Omlin et al. (2001)
[k] values from Köhler et al. (2002) for "Müggelsee" and "Langer See", converted based on Omlin et al. (2001)
[m] assuming full mixing of a bi-annual CSO event (445.000 m^3) with River Spree in central Berlin (3.150.000 m^3), using average of minimal and maximal CSO concentrations
[n] average daytime radiation in Berlin from June to August for the years 2005-2008
[o] 50 % of average wind speed 10 m above ground at Tempelhof, Berlin

This observation can be explained by the fact that nitrifying bacteria grow significantly slower than most heterotrophs (Chapra 1997). For instance it takes more than a week to establish a sufficient population of nitrifiers in a WWTP, when starting from raw sewage (pers. comm. J. Stüber). The sediment biofilm in rivers or the recycled sludge in WWTP allows the maintaining of a nitrifier population that can react faster to sudden NH_4-increases. Converting areal nitrification rates, measured by Pauer and Auer (2000) for the US Seneca River, to the depth of the River Spree leads to an estimated value of ~0.1

mg-N/L/d. This value is in the range of 0 – 0.9 mg-N/L/d, found in an earlier work (Cooper 1984), which studied 11 river sites. The literature values indicate that ammonium removal is clearly dominated by nitrification, which is about two orders of magnitude faster than plant uptake (Table 4.2). Moreover, we neglected NH_4 release of plants, which may be dominant in lowland rivers. As a result we outline model approaches for nitrification only.

Table 4.2: Ammonium-removal rates

Process	Unit	Rate
Maximal phytoplankton uptake	[mg-N/L/d]	0.002 [a] 0.001 [b]
Nitrification in rivers/river sediments	[mg-N/L/d]	0 – 0.89 [c] 0.11 [d]

[a] assimilation calculated based on Chl-A in Table 4.1 after Kalff (2003) (assimilation [mg-C/m^3/d] = 0.14 · Chl-A [mg/m^3]), converted to N using Redfield (1958) ratio

[b] N-NH_4 uptake based during CSO (values from Table 4.1), based on algal growth equation in Reichert et al. (2001)

[c] range of benthic nitrification observed by Cooper (1984), converted using nitrification stoichiometry and average depth of Spree of 3 m

[d] nitrification at river sediment observed by Pauer and Auer (2000), converted using average depth of Spree of 3 m

4.1.1 Model formulation for nitrification

The classical representation assumes that reaction (4.1) takes place in one step (Table 4.3). A one-step approach is used by models Qual2K, WASP7 and CE-QUAL-W2 in chapter 3. According to Table 4.3 the rate of nitrification increases with temperature and DO concentration. Based on the exponential function used, strong DO limitation occurs if concentrations drop below 2 mg/L. An alternative to the exponential DO limitation term is the use of a half-saturation function (as shown in Table 4.4). Half saturation concentrations are chosen typically between 0.1 and 0.5 mg/L (Cole and Wells 2008; Reichert et al. 2001). Observed maximal ammonium decay rates k_{nit} in US rivers were between 0.001/d and 0.95/d with an average of 0.12/d (Cole and Wells 2008). The result of the simple, one-step process formulation is shown in Figure 4.1a. The rate of N-NH_4 decay is reduced clearly with decreasing N-NH_4 level.

The approach in Table 4.3 neglects the two-step character of nitrification. The process must be split into two steps if the intermediate product NO_2^- is of interest. Nevertheless, NO_2^- is often omitted, because the oxidation of NH_4^+ to NO_2^- is significantly slower than the step from NO_2^- to NO_3^- and consequently concentrations of NO_2^- are typically low (Kalff 2003). Still, NO_2^- can be important in some cases, given its toxicity to aquatic organisms, which is only slightly lower than NH_3-toxicity for most fish species (Leszinski et al. 2007). A two-step nitrification can be incorporated simply by using two nitrification processes, using the same formulation as for the one-step approach in Table 4.3. Chapra (1997) suggests maximal rates k_{nit1} = 0.25/d and k_{nit2} = 0.75/d.

Table 4.3: Representation of nitrification in Qual2K (Chapra et al. 2007)

Process rate			
$\frac{dc(NH4)}{dt} = k_{nit} \cdot \theta^{T-20} \cdot (1 - e^{-K \cdot c(DO)}) \cdot c(NH4)$			
Stoichiometry			
c(NH4)	NH_4-oxidation	[mg-N/mg-N]	-1
c(NO3)	NO_3-production	[mg-N/mg-N]	1
c(DO)	Oxygen consumption	[mg-O_2/mg-N]	-4.57
Variables and constants			
c(NH4)	Ammonium concentration	[mg-N/m^3]	var[a]
c(NO3)	Nitrate concentration	[mg-N/m^3]	var[a]
c(DO)	Dissolved oxygen	[mg/L]	var[a]
T	Water temperature	[°C]	var[a]
k_{nit}	Maximal nitrification rate at 20 °C	[1/d]	0.12[b]
Θ	Temperature coefficient	[-]	1.07
K	Coefficient for effect of DO limitation	[1/(mg/L)]	0.6

[a] state variable

[b] value by Cole and Wells (2008), since Qual2K default of k_{nit} = 1/d is beyond observed range

Regarding DO stoichiometry, first step of nitrification (oxidation to nitrite) requires 3.43 mg-O_2/mg-N and second step consumes 1.14 mg-O_2/mg-N. This two-step approach yields a similar result for N-NH_4 as the one in Table 4.3, with the difference that N-NO_2 is represented (Figure 4.1b). The difference in N-NH_4 decrease in Figures 4.1a and 4.1b results from different nitrification rates by Coles and Wells (k_{nit} = 0.12/d) and Chapra (k_{nit1} = 0.25/d), respectively.

Both approaches above neglect the fact, that nitrification rates are strongly dependent on populations of nitrifying bacteria. As a result, some models (e.g., RWQM1, QSim or RIVE) explicitly simulate nitrifying bacteria. The approach of RWQM1 is shown in Table 4.4. The inclusion of nitrifying bacteria leads to a similar situation after 10 days as the simpler approaches (Figure 4.1c). However the pattern of ammonium decay is very different. Since populations need to build up before significant nitrification occurs, ammonium concentration stays high for about four days but decreases rapidly once population has reached a critical level. Such a time lag in nitrification can be very important during CSO, because ammonium may remain at a toxic level for a longer period.

Qsim explicitly simulates 1st and 2nd stage nitrifying bacteria, using a similar approach to Table 4.4 (Kirchesch and Schöl 1999). Default values for population densities are 0.0008 mg-DM/L, in the range of populations in the water column in Table 4.1, but distinctly lower than expected at the sediment or under CSO influence. Using the RWQM1 approach in Table 4.4 with 0.0008 mg-DM/L as initial nitrifier density, extends the time lag before ammonium is reduced from four to seven days (Figure 4.1d). The lower initial concentration of 2nd-stage nitrifiers has the additional effect that NO_2^- increases to a higher level before being oxidized. The simulation results in Figure 4.1c

and 4.1d indicate a strong sensitivity of (i) time lag before ammonium decrease and (ii) maximal concentration of intermediate NO_2^- to nitrifier densities.

Although the inclusion of slow-growing nitrifying bacteria is sensible mechanistically, it needs to be used with care. On the one hand, concentrations of nitrifying bacteria are rarely measured and assumptions need to be made for initial and boundary conditions. This is particularly critical, given the observed sensitivity of nitrification to nitrifying bacteria above. Moreover, simulation results cannot be validated with actual observations. On the other hand, observations indicate that nitrification does mainly take place at the sediment biofilm (Cooper 1984; Pauer and Auer 2000). As most model approaches assume nitrification to happen in the water column, (i) nitrifying bacteria state variables are artificial since they represent a sediment process and (ii) the time lag between NH_4-pollution and nitrification expected from lab conditions does not necessarily happen, because significant populations of nitrifiers may exist at the sediment. A possible alternative is the explicit simulation of the sediment biofilm, as suggested by Pauer and Auer (2009). However their model is very sensitive to the biofilm thickness, a parameter difficult to measure. As a result their approach is mostly of academic value.

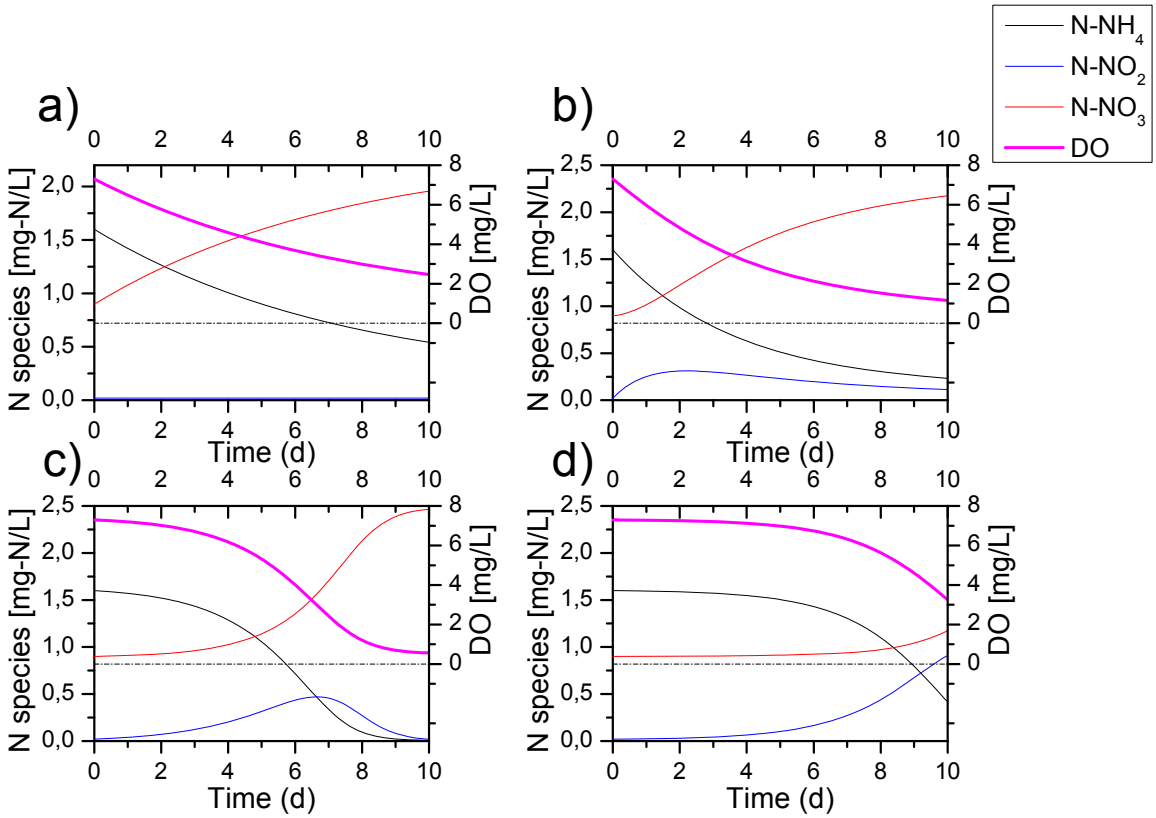

Figure 4.1: Simulation results for different representations of nitrification for an external ammonium source. Values for River Spree with CSO influence according to Table 4.1 were used as initial conditions. a) is one-step approach (Chapra et al. 2007) with maximal nitrification rate k_{nit} = 0.12/d from Cole and Wells (2008), as in Table 4.3. b) is two-step approach with maximal nitrification rates $k_{nit,1}$ = 0.25/d and $k_{nit,2}$ = 1/d after Chapra (1997). c) is two-step approach including nitrifying bacteria from Reichert et al. (2001), as in Table 4.4. d) is same as c) but using Qsim default of 0.0008 mg-DM/L as initial nitrifier density.

Table 4.4: Representation of nitrification in RWQM1 (Reichert et al. 2001)

Process rate, step 1			
$\frac{dc(Nit1)}{dt} = k_{gro,nit1} \cdot e^{\beta N1 \cdot (T-20)} \cdot \frac{c(DO)}{K_{DO,1} + c(DO)} \cdot \frac{c(NH4)}{K_{NH4,1} + c(NH4)} \cdot \frac{c(PO4)}{K_{PO4,1} + c(PO4)} \cdot c(Nit1)$			
Stoichiometry[b]			
c(Nit1)	Growth of 1st-stage nitrifiers	[mg-DM/mg-DM]	1
c(NH4)	NH_4-oxidation	[mg-N/mg-DM]	-7.69
c(NO2)	NO_2-production	[mg-N/mg-DM]	7.57
c(DO)	Oxygen consumption	[mg-O_2/mg-DM]	-24.35
c(PO4)	P uptake of bacteria	[mg-P/mg-DM]	-0.03
Process rate, step 2			
$\frac{dc(Nit2)}{dt} = k_{gro,nit2} \cdot e^{\beta N2 \cdot (T-20)} \cdot \frac{c(DO)}{K_{DO,2} + c(DO)} \cdot \frac{c(NO2)}{K_{NO2,2} + c(NO2)} \cdot \frac{c(PO4)}{K_{PO4,2} + c(PO4)} \cdot c(Nit2)$			
Stoichiometry[b]			
c(Nit2)	Growth of 2nd-stage nitrifiers	[mg-DM/mg-DM]	1
c(NO2)	NO_2-oxidation	[mg-N/mg-DM]	-33.33
c(NO3)	NO_3-production	[mg-N/mg-DM]	33.21
c(DO)	Oxygen consumption	[mg-O_2/mg-DM]	-35.94
c(PO4)	P uptake of bacteria	[mg-P/mg-DM]	-0.03
Variables and constants[b]			
c(Nit1)	Biomass of 1st-stage nitrifiers	[mg-DM/m^3]	var[a]
c(Nit2)	Biomass of 2nd-stage nitrifiers	[mg-DM/m^3]	var[a]
c(NH4)	Ammonium concentration	[mg-N/m^3]	var[a]
c(NO2)	Nitrite concentration	[mg-N/m^3]	var[a]
c(NO3)	Nitrate concentration	[mg-N/m^3]	var[a]
c(DO)	Dissolved oxygen	[mg/L]	var[a]
c(PO4)	Orthophosphate concentration	[mg-P/m^3]	var[a]
T	Water temperature	[°C]	var[a]
$k_{gro,nit1}$	Maximal Nit1-growth rate at 20 °C	[1/d]	0.8
$k_{gro,nit2}$	Maximal Nit2-growth rate at 20 °C	[1/d]	1.1
β_{N1}	Temperature coefficient for Nit1	[1/°C]	0.098
β_{N2}	Temperature coefficient for Nit 2	[1/°C]	0.069
$K_{DO,1}=K_{DO,2}$	DO half saturation	[mg-O_2/L]	0.5
$K_{NH4,1}=K_{NO2,2}$	DO half saturation	[mg-N/m^3]	500
$K_{PO4,1}=K_{PO4,2}$	Orthophosphate half saturation	[mg-P/m^3]	20

[a] state variable

[b] DM refers to dry biomass

The overview indicates that a simple approach, which assumes nitrification to start once NH_4 concentration increases, may work well. It is suggested to judge from measurements in the River Spree, whether a significant delay of nitrification can be observed. If there is a significant lag, nitrifier population should be considered; otherwise a simple approach can be used.

4.2 Dissolved oxygen

According to the review by Cox (2003) the following processes are expected to be major contributors to the oxygen regime of rivers:

(1) Oxygen consumption as a result of decay of organic matter and other reduced substances

(2) Respiration by phytoplankton and sessile aquatic plants

(3) Oxygen consumption as a result of decay of organic matter and other reduced substances at the river bed (also referred to as sediment oxygen demand (SOD))

(4) Photosynthetic oxygen production by phytoplankton or sessile plants

(5) Exchange with atmospheric oxygen (often referred to as reaeration if process is an oxygen source)

The five processes above are measurable components (even if measurement may require significant effort) of the oxygen budget of a river. Mechanistically, they can be split into several sub-processes. Significant sub-processes are (a) bacterial respiration, which is implicitly included in (1) (Reichert et al. 2001) and (b) nitrification, which is included in (2) and (3) (Cox 2003). Table 4.5 gives estimated oxygen removal and production rates for lowland rivers for the five processes and two sub-processes. Both literature values for lowland rivers, as well as steady-state rates for the River Spree indicate that most of the processes in Table 4.5 may have a significant impact on the oxygen budget, with reaction rates that can be in the order of ~1 mg-O_2/L/d. Lowest values are found for phytoplankton and bacterial respiration (here bacterial respiration excludes the decomposition of organic matter and represents only the “feeding” on own biomass, analogous to RWQM1) around ~0.2 mg-O_2/L/d. While these processes are important to explain the day-night DO fluctuations in natural rivers, they will not be discussed further given their moderate overall influence.

The large discrepancy between measurements and simulation approaches for nitrification can be explained by the time lag in RWQM1 (Figure 4.1c), which assumes that nitrifying bacteria need a build-up phase. In contrast, measurements are based on benthic nitrification in rivers with generally elevated ammonium concentrations (Cooper 1984; Pauer and Auer 2000). As outlined in chapter 4.1, it is not clear yet which nitrification approach suits the River Spree. Nevertheless nitrification may be a significant process for oxygen consumption.

In summary all the processes, apart from respiration, may be potentially significant for the oxygen regime of the River Spree in Berlin. Thus their formulation in models is outlined in detail in the following subsections.

Table 4.5: Removal and production rates for dissolved oxygen in lowland rivers

Process	Unit	Rate[a]			
		Literature		RWQM1 [b]	
				River	CSO influence
(1) Decay of organic matter in water column	[mg-O_2/L/d]	-0.6 - -16.4 [c]		-0.25 -0.78 [e]	-0.99 -5.19 [e]
(2) Phytoplankton respiration	[mg-O_2/L/d]		-0.3 [d]	-0.21	-0.18
(1b) Bacterial (and consumer) respiration in water column [m]	[mg-O_2/L/d]			-0.09	-0.16
(3) Decay at sediment	[mg-O_2/L/d]		-1.8 [d] -0.07 - -0.3 [f] -0.7 - -3.3 [f]	-0.09 [g]	-0.77 [g]
(1 & 3) Nitrification	[mg-O_2/L/d]	-0.5 - -4.1 [h]		-0.01	-0.08
(4) Photosynthesis	[mg-O_2/L/d]	0.2 - 18.3 [c] 1.0 (1.0) [d]		0.70 [j]	0.72 [j]
(5) Reaeration	[mg-O_2/L/d]	wide range		0.25 [k]	0.68 [k]

[a] negative for removal
[b] steady state model rates for concentrations of the River Spree, with and without CSO influence (Table 4.1). If not indicated otherwise rates are calculated based on RWQM1 formulation by Reichert et al. (2001)
[c] total photosynthesis (including macrophytes and benthic algae) and total respiration (including decay and respiration of all organisms) from Odum (1956)
[d] total photosynthesis (including macrophytes and benthic algae) and total respiration (including decay and respiration of all organisms) measured in the River Spree upstream of Berlin (Freienbrink) from Köhler et al. (2002). Value in parentheses is phytoplankton.
[e] classical Streeter-Phelps approach using BOD decay rate 0.23/d from Chapra et al. (2007)
[f] Measured sediment oxygen demand on sandy sediments (lower range) and affected by sewage effluent or mussels (higher range), summarized in Chapra (1997)
[g] simplified approach assuming immediate decay of settling CBOD, using (TOC-DOC)/TOC ratio to calculate particulate CBOD and sinking velocity of 0.2 m/d based on Chapra (1997). For more elaborate model approach sediment information is required.
[h] nitrification at sediment observed by Cooper (1984) and Pauer and Auer (2000), converted using nitrification stoichiometry and average depth of Spree of 3 m
[j] only photosynthesis from phytoplankton, assuming phytoplankton growth only in top meter; average daily value was multiplied by 0.5 to calculate 24h-production
[k] reaeration rate is strongly system dependent. Numbers are based on oxygen and temperature values for the River Spree in Table 4.1 and an estimated reaeration rate k_a of 0.35/d. k_a was calculated based on summary of approaches by Chapra (1997) using wind speed, depth and flow speed of River Spree
[m] excluding decomposition of external organic matter

It is noteworthy that observed total photosynthesis and total oxygen consumption by Odum (1956) can reach values of up to 16.4 mg/L/d and 18.3 mg/L/d, respectively, far higher than expected values for the River Spree of around 1 mg/L/d (Table 4.5). The reason for the high literature rates in rivers are mainly high densities of macrophytes or filter feeders, which are not present in the River Spree in Berlin (Leszinski et al. 2006). This is confirmed also by measurements upstream of Berlin, where phytoplankton

contributed almost 100 % of system production, indicating low macrophyte populations (Köhler et al. 2002). In the meantime, situation in the River Spree upstream of Berlin have shifted from phytoplankton to macrophyte dominance (pers. comm. J. Köhler). However, this is not the case for the stretch in the city of Berlin, where macrophytes are mostly absent. In the overall budget between total production (without reaeration) and total removal of DO, Köhler et al. (2002) found a net DO deficit of 1.1 mg-O_2/L/d, which is mainly caused by high SOD. It is unknown how representative these upstream measurements from the 1990s are for the current situation in Berlin, particularly given the recent shift towards macrophytes. Nevertheless the results indicate (a) that the River Spree in Berlin is a DO sink even in the absence of CSO and (b) that SOD may have an important impact on the DO level.

4.2.1 Model formulation for oxygen demand from nitrification

Model formulations for nitrification have been dealt with in detail in chapter 4.1.1, including the effect on DO. As shown in Figure 4.1, the main question is whether the process starts at maximal rate once ammonium concentrations increase in the river or whether nitrifier population needs to build up first.

4.2.2 Model formulations for decay of organic matter

As outlined in chapter 2.3, oxygen demand of organic matter can either be represented with full mass balances resolving organic carbon or by using bulk BOD values. The latter is typically done with an approach that distinguishes between dissolved and particulate BOD (Chapra 1997). Instead of assuming that a certain share of BOD settles per unit of time Qual2K defines a state variable particulate organic matter (POM), which needs to be hydrolysed before it can consume DO. Moreover nutrients, which are contained in POM are represented as separate state variables N_{org} and P_{org}. As a result the consumption of DO from decay can be represented in one equation, as shown in Table 4.6. It is interesting to note that Qual2K assumes a faster hydrolysis of POM to BOD than for N_{org} and P_{org} to NO_3 and SRP, respectively.

The equation in Table 4.6 requires the ultimate BOD, i.e. the oxygen demand after infinite time. In reality BOD_5 is measured instead for five days in standard dark bottle experiments. Under the assumption that the maximal decay rate in the bottle and the river are the same, ultimate BOD can be calculated from BOD_5 as follows:

$$c(BOD) = \frac{c(BOD_5)}{1 - e^{-k_{ox} \cdot 5}} \qquad 4.2$$

The default decay rate k_{ox} is between 0.05/d and 0.5/d for water which is influenced by sewage with a marked difference between treated (k_{ox} ~0.075/d) and untreated (k_{ox} ~0.35/d) sewage (Chapra 1997). BOD decay in unpolluted rivers is typically even slower than in treated sewage. As a result, the default k_{ox} of 0.23/d used in Qual2K may be slightly too low during CSO influence but a clear overestimation most of the time. An additional problem is that algal biomass is also subject to decay in dark bottle measurements, because of the absence of light. Consequently, BOD_5 of natural river water may significantly overestimate observed oxygen consumption in the river. In

summary, a classical BOD approach is likely to either overestimate or underestimate immediate oxygen demand in a river.

Table 4.6: Representation of dissolved BOD decay in Qual2K (Chapra et al. 2007)

Process rate			
$\frac{dc(BOD)}{dt} = k_{ox} \cdot \theta^{T-20} \cdot (1 - e^{-K \cdot c(DO)}) \cdot c(BOD)$			
Stoichiometry			
c(BOD)	BOD-decay	[mg-BOD/mg-BOD]	-1
c(DO)	Oxygen consumption	[mg-O_2/mg-BOD]	-1
Variables and constants			
c(BOD)	Dissolved BOD concentration	[mg-N/m^3]	var[a]
c(DO)	Dissolved oxygen	[mg/L]	var[a]
T	Water temperature	[°C]	var[a]
k_{ox}	Maximal oxidation rate at 20 °C	[1/d]	0.23
Θ	Temperature coefficient	[-]	1.047
K	Coefficient for effect of DO limitation	[1/(mg/L)]	0.6

[a] state variable

An alternative to the classical BOD decay approach is the explicit representation of different fractions of organic matter, distinguishing between inert, slow and fast degradable matter. Qsim uses such an approach, which is further complicated by the representation of break-down from dissolved to monomolecular organic matter and the biomass of heterotrophic bacteria (Table 4.7). A similar approach (though without monomolecular organic matter) is chosen by RWQM1 (Reichert et al. 2001). While the representation of different carbon fractions and heterotrophic bacteria is mechanistically consequent, they are seldom included in river monitoring or, in the case of (artificial) classes of degradability, not even measurable. Qsim overcomes this difficulty by calculating initial and boundary conditions for the required state variables from frequently measured BOD_5 and COD using the empirical relationships in Figure 4.2. The approach is based on the assumption, that higher BOD_5/COD ratios are the result of a higher share of dissolved and fast reacting organic matter.

Table 4.7: Representation of decay of organic matter in Qsim (V. Kirchesch, 2008)

Process rate, Hydrolysis of particulate to dissolved organic matter [b]			
$\frac{dc(C_{p,i})}{dt} = k_{hyd,p,i} \cdot e^{\frac{(T-25)^2}{dti^2}} \cdot c(C_{p,i})$			
Stoichiometry			
$c(C_{p,1})$	Hydrolysis of particular organic carbon 1	[mg-C/mg-C]	-1
$c(C_{p,2})$	Hydrolysis of particular organic carbon 2	[mg-C/mg-C]	-1
$c(C_{D,1})$	Production of dissolved organic carbon 1	[mg-C/mg-C]	1
$c(C_{D,2})$	Production of dissolved organic carbon 2	[mg-C/mg-C]	1
Process rate, Hydrolysis of dissolved to monomolecular organic matter [b]			
$\frac{dc(C_{D,i})}{dt} = k_{hyd,D,i} \cdot e^{\frac{(T-25)^2}{dti^2}} \cdot \frac{c(C_{D,i})}{c(C_{D,i}) + K_{D,i}} \cdot c(HBAC)$			
Stoichiometry			
$c(C_{D,1})$	Hydrolysis of dissolved organic carbon	[mg-C/mg-C]	-1
$c(C_{D,2})$	Hydrolysis of dissolved organic carbon	[mg-C/mg-C]	-1
$c(C_M)$	Production of monomolecular carbon	[mg-C/mg-C]	1
Process rate, Carbon uptake of heterotrophic bacteria [b]			
$\frac{dc(HBAC)}{dt} = k_{up,HBAC} \cdot e^{\frac{(T-25)^2}{dti^2}} \cdot \frac{c(C_M)}{c(C_M) + K_M} \cdot Y \cdot c(HBAC)$			
Stoichiometry			
$c(C_M)$	Uptake of monomolecular carbon	[mg-C/mg-C]	-1/Y
c(HBAC)	Growth of heterotrophic bacteria	[mg-C/mg-C]	1
c(DO)	Oxygen consumption	[mg-O_2/mg-C]	-2.64 [c]
Variables and constants[b]			
$c(C_{p,1})$	Particular, fast degradable organic carbon	[mg-C/L]	var[a]
$c(C_{p,2})$	Particular, slowly degradable organic carbon	[mg-C/L]	var[a]
$c(C_{D,1})$	Dissolved, fast degradable organic carbon	[mg-C/L]	var[a]
$c(C_{D,2})$	Dissolved, slowly degradable organic carbon	[mg-C/L]	var[a]
$c(C_M)$	Monomolecular organic carbon	[mg-C/L]	var[a]
c(HBAC)	Biomass of heterotrophic bacteria	[mg-C/L]	var[a]
c(DO)	Dissolved oxygen	[mg/L]	var[a]
T	Water temperature	[°C]	var[a]
$k_{hyd,p,1}$	Maximal rate of hydrolysis for class 1 at 25 °C	[1/d]	0.12
$k_{hyd,p,2}$	Maximal rate of hydrolysis for class 2 at 25 °C (calculated based on BSB_5/CSB ratio)	[1/d]	0.017
$k_{hyd,D,1}$	Maximal rate of hydrolysis for class 1 at 25 °C	[1/d]	18
$k_{hyd,D,2}$	Maximal rate of hydrolysis for class 2 at 25 °C (calculated based on BSB_5/CSB ratio)	[1/d]	2.04
$k_{up,\ HBAC}$	Maximal uptake rate of heterotrophic bacteria	[1/d]	3.8
dti	Temperature coefficient	[°C]	20
$K_{D,1}$	$C_{D,1}$ half saturation	[mg-C/L]	0.25
$K_{D,2}$	$C_{D,2}$ half saturation	[mg-C/L]	2.5
K_M	C_M half saturation	[mg-C/L]	0.1
Y	Yield of heterotrophic bacteria	[-]	0.25

[a] state variable

[b] indices i is 1 for fast degradable and 2 for slowly degradable organic matter

[c] stoichiometry from Reichert et al. (2001), since unknown for Qsim

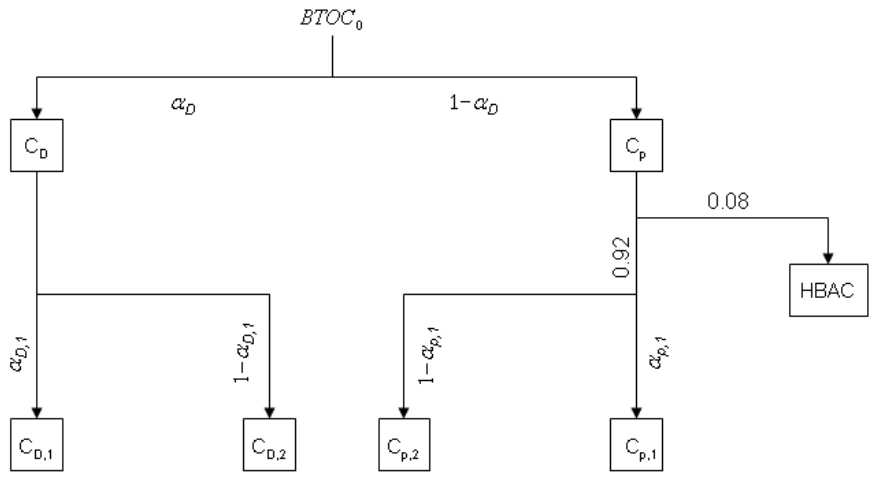

where

$$BTOC_0 = \frac{BOD_5}{4} \cdot 0.641 \cdot \left(\frac{BOD_5}{COD}\right)^{-1.071} \qquad \alpha_{D,1} = 0.86 \cdot \left(\frac{BOD_5}{COD}\right)^{0.807}$$

$$\alpha_D = 3.606 \cdot \left(\frac{BOD_5}{COD}\right)^{1.85} \qquad \alpha_{p,1} = 2.41 \cdot \left(\frac{BOD_5}{COD}\right)^{1.3}$$

Figure 4.2: Calculation of initial and boundary conditions of degradable carbon fractions in Qsim. $BTOC_0$ [mg-C/L] is total degradable organic matter, C_D [mg-C/L] is total dissolved organic matter, C_p [mg-C/L] is particulate organic matter including biomass of heterotrophic bacteria HBAC [mg-C/L], indices 1 and 2 indicate fast and slowly degradable fractions, respectively. Note that the approach is only valid for $BOD_5/COD < 0.5$.

Figure 4.3 compares the development of DO for the Qual2K and the Qsim approaches, based on initial conditions in Table 4.1 during CSO influence. As expected, the comparably high BOD decay rate by Chapra et al. (2007), together with ultimate BOD estimation from equation (4.2) leads to a very fast DO decrease (Figure 4.3a). In the Qsim approach DO decrease is similarly fast for fast degradable dissolved organic matter $C_{D,1}$, but damped by particular and slowly degradable fractions (Figure 4.3b). The high decay rates for $C_{D,1}$ and C_M avoid an accumulation of the two species. In other words, $C_{D,1}$ basically decays as soon as it enters the river, e.g., as a result of hydrolysis of $C_{p,1}$ or because of an external source. Although the approach in Qsim is mainly aimed at situations in natural rivers, it is relatively robust even for sewage inflows, thanks to the dependence of carbon fractionation on the BOD5/COD ratio (which is typically much higher for sewage than for river water, see Table 4.1). However, the question whether the decay rates in Qsim are a good representation of DO consumption after CSO remains to be tested. An alternative approach is used by CE-Qual-W2, which uses carbon-based processes, similar to Qsim, to represent internal river cycling and BOD to represent sewage effluents (Cole and Wells 2008). Depending on type of effluents BOD decay rates can be set by the user.

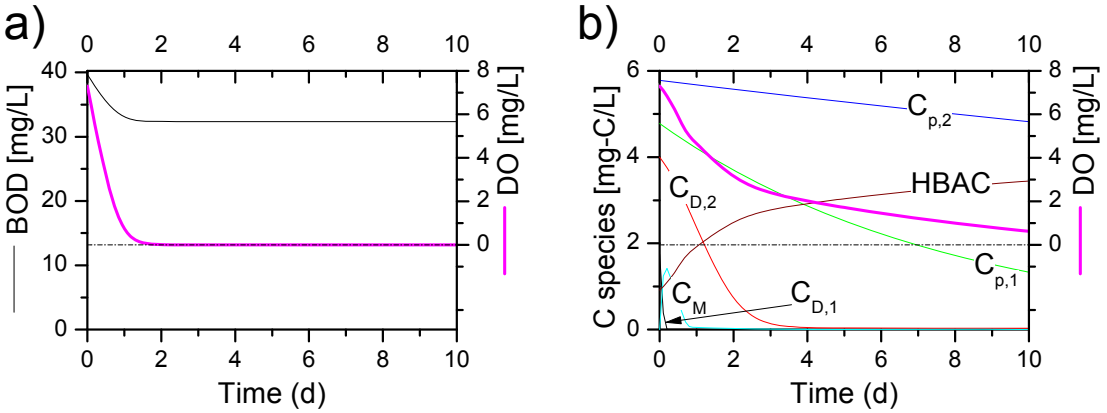

Figure 4.3: Simulation results for different representations of decay of organic matter. Values for River Spree with CSO influence in Table 4.1 were used as initial conditions.
a) is simple BOD decay applied in Qual2K (Chapra et al. 2007) with maximal BOD decay rate k_{nit} = 0.23/d, as in Table 4.6.
b) is approach of Qsim (V. Kirchesch, pers. comm), as outlined in Table 4.7. Nomenclature of C species is explained in Table 4.7, intitial conditions were calculated based on Figure 4.2.

One issue might be heterotrophic bacteria. According to equations in Figure 4.2, initial (or CSO inflow) HBAC is decreasing with increasing BOD_5/COD ratio. In Figure 4.3b this leads to build-up phase of about two days of HBAC population. Since decay of organic matter and DO consumption is proportional to HBAC, these processes are consequently slower during this phase. According to Even et al. (2007a; 2007b), DO decay after CSO in rivers is accelerated by heterotrophic bacteria in the raw sewage. As a result it may be necessary to include HBAC as a direct input variable in Qsim.

4.2.3 Model formulation for exchange with atmosphere

Reaeration is the only DO source term in the classical approach by Streeter and Phelps (1925). Despite its early inclusion reaeration is a complex process to represent. For one-dimensional models, typically the simplified, volume-averaged approach is applied:

$$\frac{dc(DO)}{dt} = k_a \cdot \left(c_s(DO) - c(DO)\right) \qquad 4.3$$

where c(DO) [mg/L] is concentration of dissolved oxygen, c_s(DO) [mg/L] is concentration of dissolved oxygen at saturation (depending on water temperature, e.g., calculated after Weiss (1970)), k_a [1/d] is rate of atmospheric exchange. Equation (4.3) leads to a DO increase in a river if c_s(DO) is higher than c(DO) and a decrease if water is supersaturated (e.g., as a result of high rate of algal production).

The simplicity of equation (4.3) stops at the definition of k_a, which is typically left to the model user. Based on observations, k_a is between 10^{-2}/d and 10^5/d for river systems in general and between 10^{-2}/d and 10^2/d for large rivers (Cox 2003). The observed exchange rates are mainly the result of turbulence-induced exchange and clearly above laboratory values for molecular diffusive exchange (Chapra 1997). In rivers turbulence is

mostly from friction at the river bed (Chapra 1997). $k_{a,U}$ [1/d] from friction can be estimated as a function of flow speed U [m/s] and river depth H [m], based on the relationship by O'Connor and Dobbins (1958):

$$k_{a,U} = 3.93 \cdot \frac{U^{0.5}}{H^{1.5}} \qquad 4.4$$

For lakes, wind-induced turbulence becomes dominant. $k_{a,W}$ [1/d] from wind-induced turbulence can be estimated as a function of wind speed W [m/s], based on the relationship by Banks and Herrera (1977):

$$k_{a,W} = \frac{0.728 \cdot U_W^{0.5} - 0.317 \cdot U_W + 0.0372 \cdot U_W^2}{H} \qquad 4.5$$

For slow-flowing, wide rivers both processes may be important. Chapra (1997) suggests to add the two contributions $k_{a,U}$ and $k_{a,W}$. For the River Spree with average flow speed of 0.5 m/s and wind speed of 2 m/s, equations (4.4) and (4.5) lead to values of $k_{a,U}$ = 0.17/d and $k_{a,W}$ = 0.18/d, indicating that indeed both processes are similarly important. There is a great number of empirical equations for dependence on flow and wind speed similar to (4.4) and (4.5). A detailed overview was provided by Cole and Wells (2008) (see Tables A.1 and A.2 in the appendix).

In Figure 4.4 we applied equation (4.3) with $k_a = k_{a,U} + k_{a,W}$ = 0.35/d in combination with RWQM1 nitrification (Table 4.4) and Qsim decay of organic matter (Table 4.7). If we compare the temporal evolvement of DO with the simulations without reaeration (Figures 4.1c and 4.3b) the effect of atmospheric exchange is clearly visible. Instead of sagging to a concentration below 1 mg/L, DO stays above 5 mg/L. The remaining DO sag is similarly expressed for decay of organic matter and for nitrification. However the effect of nitrification is subject to a lag, as a result of nitrifier representation in RWQM1. As discussed in chapter 4.1.1, it is unclear whether such a lag does occur in reality.

It is difficult to conclude whether the estimated reaeration rate is sensible for the River Spree. However the DO drop by 2 mg/L in Figure 4.4 is in a similar order of magnitude as the decrease observed after the CSO event in September 2005, which was used as a model event to estimate concentrations in the River Spree after CSO in Table 4.1 (Riechel 2009; Schumacher et al. 2007). One aspect not included in equations (4.4) and (4.5), which might be important for the River Spree is ship traffic. Particularly during daytime in the summer season frequent tourist and cargo ships travel the River Spree. The importance of the influence by ship traffic was underlined by Kramer (1974) for a US shipping channel. Model approaches are available but require detailed information on traffic frequency, ship speed and ship size, which is typically not available (Qaisi et al. 1997; Thibodeaux et al. 1994). Finally, artificial weirs or waterfalls can have a strong local impact on reaeration rates (approaches are discussed in Chapra 1997). For the simulation of the River Spree, the only weir is at the upper boundary condition (Mühlendamm). However, comparison of samples just before the weir with continuous measurements just after the weir showed no significant deviations in DO.

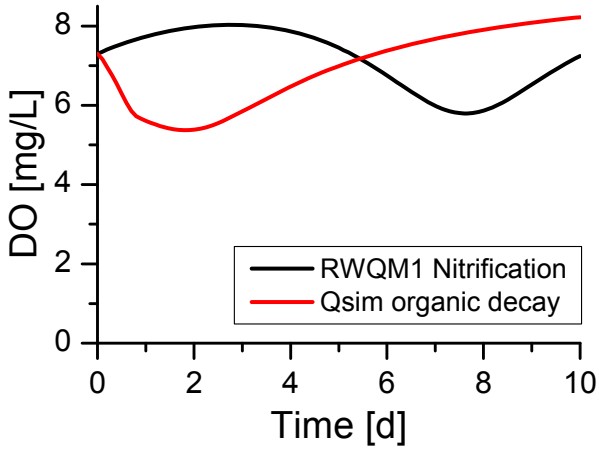

Figure 4.4: Combination of reaeration with nitrification (Table 4.4; Figure 4.1c) and with decay of organic matter (Table 4.7; Figure 4.3b) following CSO in the River Spree.

4.2.4 Model formulation for photosynthetic oxygen production by phytoplankton

Most models introduced in chapter 3 use a similar approach. Phytoplankton growth is generally dependent on nutrient availability, light and phytoplankton biomass. Differences among approaches lie mainly in the representation of full mass balances and the number of phytoplankton types (see chapter 2.3.6 for details). Moreover, some models take an NH_4 over NO_3 preference of algae into account. However, DO stoichiometry is basically the same in all the approaches. As a result only the RWQM1 approach is presented exemplarily in Table 4.8. If the set of equations in Table 4.8 are used as stand alone processes, algal biomass and DO will increase exponentially. Thus the inclusion of phytoplankton only makes sense if control processes are included in parallel. Main processes, which control phytoplankton biomass and thus the rate of DO production are phytoplankton respiration, death of phytoplankton, feeding by consumer species (if not included in general death rate) and shading by the existing phytoplankton biomass. The latter can be included by increasing the half saturation constant of light K_I in Table 4.8 (as suggested by Reichert 2001), if phytoplankton biomass is in the same range for the simulated period or in oligotrophic systems, where algal growth is limited by nutrients, rather than light. Alternatively in-situ light conditions can be made dependent on phytoplankton concentration and other suspended matter, as outlined for lake models by Omlin et al. (2001). Despite the control mechanisms above, phytoplankton production can lead to DO supersaturation in eutrophic river systems, which is then counteracted by atmospheric exchange (negative reaeration).

Table 4.8: Representation of phytoplankton growth in RWQM1 (Reichert et al. 2001)

Process rate, phytoplankton growth using NO_3 as N-source			
$$\frac{dc(Alg)}{dt} = k_{gro,Alg} \cdot e^{\beta_{Alg}\cdot(T-20)} \cdot \frac{c(NH4)+c(NO3)}{K_{N,Alg}+c(NH4)+c(NO3)} \cdot \frac{K_{NH4,Alg}}{K_{NH4,Alg}+c(NH4)} \cdot \frac{c(PO4)}{K_{PO4,Alg}+c(PO4)} \cdot \frac{I}{K_I} \cdot e^{\left(1-\frac{I}{K_I}\right)} \cdot c(Alg)$$			
Stoichiometry[b]			
c(Alg)	Growth of phytoplankton	[mg-DM/mg-DM]	1
c(NO3)	NO_3-uptake	[mg-N/mg-DM]	-0.06
c(DO)	Oxygen production	[mg-O_2/mg-DM]	1.20
c(PO4)	P uptake of bacteria	[mg-P/mg-DM]	-0.01
Process rate, phytoplankton growth using NH_4 as N-source			
$$\frac{dc(Alg)}{dt} = k_{gro,Alg} \cdot e^{\beta_{Alg}\cdot(T-20)} \cdot \frac{c(NH4)+c(NO3)}{K_{N,Alg}+c(NH4)+c(NO3)} \cdot \frac{c(NH4)}{K_{N,Alg}+c(NH4)} \cdot \frac{c(PO4)}{K_{PO4,Alg}+c(PO4)} \cdot \frac{I}{K_I} \cdot e^{\left(1-\frac{I}{K_I}\right)} \cdot c(Alg)$$			
Stoichiometry[b]			
c(Alg)	Growth of phytoplankton	[mg-DM/mg-DM]	1
c(NH4)	NH_4-uptake	[mg-N/mg-DM]	-0.06
c(DO)	Oxygen production	[mg-O_2/mg-DM]	0.93
c(PO4)	P uptake of bacteria	[mg-P/mg-DM]	-0.01
Variables and constants[b]			
c(Alg)	Phytoplankton biomass	[mg-DM/m^3]	var[a]
c(NO3)	Nitrate concentration	[mg-N/m^3]	var[a]
c(NH4)	Ammonium concentration	[mg-N/m^3]	var[a]
c(DO)	Dissolved oxygen	[mg/L]	var[a]
c(PO4)	Orthophosphate concentration	[mg-P/m^3]	var[a]
T	Water temperature	[°C]	var[a]
I	in-situ light conditions	[W/m^2]	bound[c]
$k_{gro,Alg}$	Maximal algal growth rate at 20 °C	[1/d]	2.0
β_{Alg}	Temperature coefficient for algal growth	[1/°C]	0.046
$K_{N,Alg}=K_{NH4,Alg}$	N half saturation	[mg-N/m^3]	100
K_I	Light half saturation	[W/m^2]	500
$K_{PO4,Alg}$	Orthophosphate half saturation	[mg-P/m^3]	20

[a] state variable

[b] DM refers to dry biomass

[c] boundary condition, light available in the water body

To show the general effect of phytoplankton growth, equations in Table 4.8 were simulated, keeping phytoplankton concentration on a constant level. This (artificial) simplification was chosen to show the singled-out effect of phytoplankton growth on DO, without taking plant respiration and phytoplankton limiting factors into account. Light boundary conditions were simulated using a sine relationship (setting night-time values to zero) and divided by the average water depth to take decreasing light conditions into account. Figure 4.5 shows the result of this simulation in combination with the Qsim BOD approach (Table 4.7). DO production from phytoplankton has a similar effect as reaeration, reducing the DO sag significantly. DO is increasing to super-saturation towards the end of the simulation, since DO consumption of BOD decreases (compare Fiigure 4.3b) and no other DO reducing process (such as phytoplankton respiration or decomposition of algal biomass) is considered.

Figure 4.5 points out the importance of phytoplankton growth in mitigating low DO concentrations, at least during day-time production. In the River Spree this can be seen nicely in the polluted Landwehr-Channel, where critical DO conditions below 2 mg/L are reached regularly but never during daytime (Riechel 2009). However it has to be kept in mind that on average, total DO respiration in the River Spree (at sediment and in the water column) is higher than production (Table 4.5). As a result there is high background DO consumption, which can be particularly important at night-time.

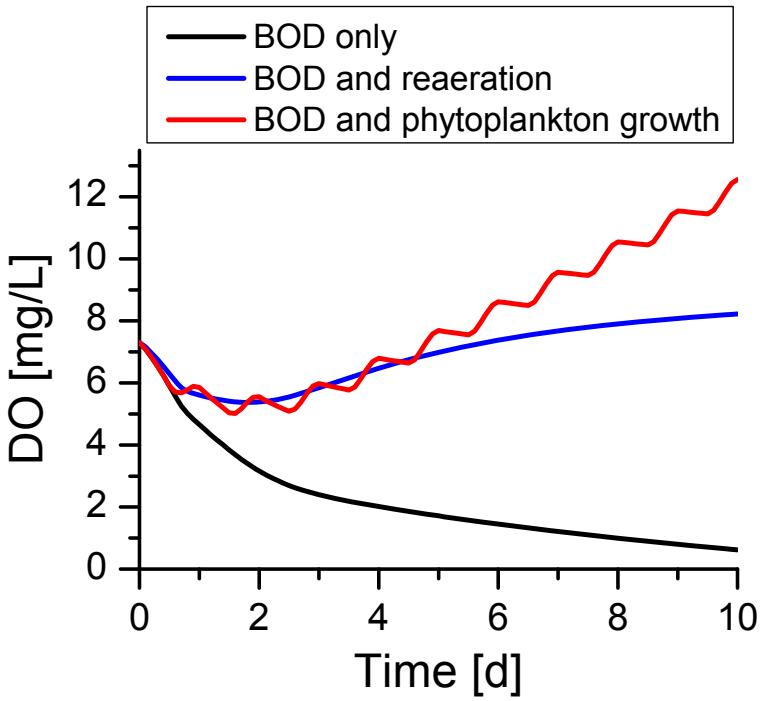

Figure 4.5: Decay of organic matter (Table 4.7; Figure 4.3b) as a single process (black line), in combination with reaeration (blue line) and in combination with phytoplankton growth (red line; Table 4.8) following CSO in the River Spree (Table 4.1). Phytoplankton concentration was kept constant, since no growth control mechanisms (such as phytoplankton respiration, phytoplankton death or light extinction by phytoplankton) were included.

4.2.5 Model formulation for sediment oxygen demand

In the simplest form (as used by Qual2E), a constant SOD is adjusted to observations, assuming that all other processes are known. In reality, SOD is dependent on (Chapra 1997; Cox 2003):

a) temperature (increased decay at higher T),

b) DO in overlying water,

c) organic matter content of sediment,

d) Sediment-water exchange and

e) reduced substances (e.g., CH_4, NH_4) in sediment pore water.

(a) can be included by making SOD temperature-dependent using an approach, as outlined for T-dependency of nitrification (Table 4.3). (b) is of great importance for rivers where DO in the water column regularly drops below 2 to 3 mg/L, since COD decay is slower in the absence of DO and because reduced substances from anaerobic decay remain in the water column and consume DO as soon as DO level recovers. Given available information for the River Spree, the water column is typically well mixed with DO above 4 mg/L (with the exception of CSO events). As a result the effect of b) can be safely neglected for the River Spree and for most river systems.

A temperature-dependent SOD may lead to reasonable results for rivers, if no full mass balances are needed and if no long-term changes in sediment-borne COD are to be considered (e.g., necessary for eutrophication modelling). The difficulty is the estimation of specific SOD. Since SOD is always the result of deposited organic matter (though it can be via direct consumption or via reduced substance fluxes), most current model approaches take settling of organic matter into account (point c above). The simplest representation assumes that SOD is equal to the settled particulate BOD or 1.1 times the settled BOD if nitrogenous oxygen demand (corrected for denitrification) is taken into account (Chapra 1997). This simple representation does not require a sediment compartment, which is certainly an advantage. However, it is only valid at steady state. For instance, it predicts a high SOD during high BOD deposition (e.g., during a CSO event), although in reality decay occurs with a time lag and short-term changes are averaged out. Moreover, only a certain share of settled BOD is actually transformed to SOD, whereas the remainder enters the sediment permanently.

If steady state cannot be assumed, a sediment compartment with a memory for settled suspended matter has to be implemented. Several models, which are compared in Table 3.1 allow the use of such a sediment compartment (if sediment complexity according to chapter 2 is ≥ 2). Substance concentrations in the sediment then follow input and can therefore represent realistic sediment-water fluxes. Within the sediment compartment similar processes as in the water column can be used. For instance, the decay of organic matter used in Qsim (Table 4.7), which splits particulate organic matter into inert, slowly degradable and fast degradable matter could be transferred to the sediment. Possibly, decay rates would have to be adapted to predominantly anoxic conditions (e.g., Reichert et al. 2001) and higher densities of microorganisms (e.g., Omlin et al. 2001).

For (d) molecular diffusive exchange across the diffusive boundary layer between sediment and overlying water is often assumed (Chapra 1997). Obviously simulation gets much more complex, if sediment resuspension during high flow or, more importantly for the River Spree, during ship traffic occurs. The occasional erosion of the uppermost sediment layer can be considered by the models WASP7 and Infoworks RS (see chapter 3).

Sediment representation can be further refined by considering the formation of reduced substances. In particular CH_4 requires an advanced approach, since it can form bubbles which leave the sediment without creating SOD. However the representation of such advanced substance fluxes also require the distinction of two or more sediment layers Chapra (1997). Apart from creating higher numerical effort (multiple layer sediment system is two-dimensional), the definition of these layers requires advanced system-specific knowledge, which is typically not available. For instance, the use of an upper aerobic (gravel) layer and a lower anaerobic layer, which is assumed by most advanced river bed formulations (such as in Qual2K, WASP7 or Infoworks RS) is not a very realistic concept for the polluted lowland River Spree. If at all, oxygen only penetrates the top mms of the homogenously fine sediment (pers. comm. M. Leszinski).

In summary, the simplest possible SOD approach should be used for the simulation of the River Spree for the evaluation of CSO. Depending on test results, a T-dependent SOD or a sediment compartment with same processes as in the water column might suffice. It is not suggested to use a more complex approach unless clearly indicated by measurements.

Chapter 5
Conclusions

5.1 Range of river water quality models

Freshwater ecosystems are based on complex interactions of biogeochemical processes, i.e. physical (e.g., mixing, gas exchange), geochemical (e.g., nutrient recycling, oxygen consumption) and biological (e.g., algae growth, microbiologically catalysed chemical reactions) processes. Since the 1980s, water quality models have been used to better understand or untangle these processes and to make predictions on future development. River water quality models split a river section into a finite number of segments, for which the following three components are run:

- a hydraulic model, which calculates a flow field and – in the case of rivers – water depth for each simulated segment,
- a transport model, which describes the (conservative) transport of dissolved and suspended substances between simulated segments and
- a reaction model, which simulates all biogeochemical transformations.

Common approaches were discussed and classified according to complexity for hydraulic models, transport models and the reaction sub-models

- biological degradation,
- acid-base equilibria,
- closed mass balances,
- processes at the sediment,
- microorganisms,
- phytoplankton species,
- benthic algae and macrophytes and
- organisms of higher trophy.

Ideally model complexity should be adapted to specific application to avoid unnecessary calculation time and data collection and to simplify interpretation of results.

Several popular river water quality models are studied and classified according to the defined complexity levels in chapter three of this report. Models have been chosen, based on their popularity in application and scientific literature (Qual2K, WASP7, CE-QUAL-W2, MIKE11, RWQM1), as well as their specific use for CSO assessment (RIVE, Qsim). Moreover the model Infoworks RS was assessed, a relatively recent water quality application by Walingford Ltd. The assessment showed that each of the studied models has certain aspects, which are dealt with in great detail. For instance,

- Qsim is most detailed regarding biological parameters, which makes it well suited to represent seasonal changes in river water quality, including the impacts of phytoplankton succession, seasonal growth of benthic algae and macrophytes, as well as filter feeders.

- RIVE focuses particularly on different size classes of microorganisms, which may be critical when judging the effect of sewage inflow.
- WASP7 has the most detailed sediment compartment, enabling the representation of sediment feedback, increase of sediment thickness, compaction and seasonal erosion, which may be critical for channels used for shipping or the assessment of pollution with suspended particles.
- RWQM1 takes great care to consider full mass balances by following each chemical element throughout the river system.

On the other hand, none of the model applications reaches highest complexity level throughout. Although complexity can be adapted to a certain extent in all applications, only the tools Aquasim (for RWQM1) and Ecolab (for MIKE11) allow full and simple control of processes, process stoichiometry and process rates.

Adaptation of the model to specific questions will be of special relevance when integrating with an urban drainage model. Here, even more than in usual modelling studies it is necessary to reduce the complexity and the size of integrated model as far as possible.

5.2 Main challenges in CSO representation with Qsim

Along the focus of the project SAM-CSO, the fourth chapter of this report focuses on ammonium and DO in rivers, given their importance for aquatic organisms during the impact of CSO. Most relevant processes were identified (i) based on values and empirical relationships from literature or (ii) based on steady-state ammonium and DO sensitivities for the River Spree, calculated using well documented water quality model equations.

For the River Spree during CSO influence, nitrification turned out to be the most important process for ammonium representation, whereas for the DO regime

- nitrification,
- oxygen consumption as a result of decay of organic matter and other reduced substances,
- oxygen consumption as a result of decay of organic matter at the river bed,
- photosynthetic oxygen production by phytoplankton or sessile plants and
- exchange with atmospheric oxygen (often referred to as reaeration)

were identified as major processes. For all the processes above, different modeling approaches are discussed in chapter 4 of this report.

Nitrification – The overview indicates that a simple approach, which assumes that nitrification depends only on NH_4 and DO concentration may work well. More complex approaches, which consider populations of nitrifying bacteria, create a time lag in nitrification because populations need to build up. It is suggested to judge from future measurements in the River Spree, whether a significant delay of nitrification can be observed. If there is a significant lag, nitrifier population should be considered; otherwise a simple approach can be used.

Decay of organic matter – The formulation of decay of organic matter in Qsim seems well suited to cope with organic decay during CSO. The main question is whether specific CSO constituents need to be included, such as microorganisms or an extra class of fast degradable organic matter.

Reaeration – Although many studies have dealt with reaeration, it is difficult to assess a sensible value for the River Spree. Different reaeration rates will therefore have to be tested.

Phytoplankton growth – Phytoplankton models are quite established. In the application for the River Spree local calibration of growth rates and/or adaptations to light conditions in the River Spree may be necessary.

Decay at sediment –The simplest possible approach should be used for the simulation of the River Spree for the evaluation of CSO. Depending on model tests, a simple temperature-dependent sediment oxygen demand or a sediment compartment with the same processes as in the water column might suffice. It is not suggested to use a more complex approach unless clearly indicated by measurements.

Bibliography

Ambrose, R. B., J. L. Martin, and T. A. Wool. 2006. WASP7 Benthic Algae - Model Theory and User's Guide, p. 32. US Environmental Protection Agency.

ATV. 2002. Handbuch ATV-DVWK-Gewässergütemodell. *In* ATV-DVWK-Arbeitsgruppe GB-4.2 [ed.]. ATV-DVWK Hauptgeschäftsstelle.

Banks, R. B., and F. F. Herrera. 1977. Effect of wind and rain on surface reaeration. ***Journal of the Environmental Engineering Division ASCE*** 101**:** 813-827.

Beck, M. B. 1976. Dynamic modelling and control applications in water quality maintenance. ***Water Research*** 10**:** 575-595.

Behrendt, H., P. Huber, M. Kornmilch, D. Opitz, O. Schmoll, G. Scholz, and R. Uebe. 2000. Nutrient Emissions into River Basins of Germany. Report UBA-FB. UBA.

Borchardt, D., and P. Reichert. 2001. River Water Quality Model no. 1 (RWQM1): Case study I. Compartmentalisation approach applied to oxygen balances in the River Lahn (Germany). ***Water Science and Technology*** 43**:** 41-49.

Brehmer, I., F. Reussner, M. Schütze, D. Muschalla, and M. Ostrowski. 2009. Weiterentwicklung des hessischen Leitfadens zum Erkennen ökologisch kritischer Gewässerbelstungen durch Abwassereinleitungen - Entwicklung einer simulationsgestützten Analyse- und Planungsmethodik. ***Korrespondenz Abwasser, Abfall*** 56**:** 382-384.

Brion, N., and G. Billen. 2000. Wastewater as a source of nitrifying bacteria in river systems: The case of the River Seine downstream from Paris. ***Water Research*** 34**:** 3213-3221.

Brombach, H., and L. Fuchs. 2002. Datenpool gemessener Verschmutzungskonzentrationen von Trocken- und Regenwetterabflüssen in Misch- und Trennkanalisation. Abschlussbericht des Projektes 1-01 des ATV-DVWK-Forschungsfond 2001, Langfassung mit Umfangreichen Winword- und Excelldateien, Januar 2002. Unveröffentlicht. Zu beziehen bei der ATV-DVWK Geschäftstelle, Hennef.

Brown, L. C., and T. O. Barnwell. 1987. The enhanced stream water quality models QUAL2E and QUAL2E-UNCAS: Documentation and User Manual. US EPA.

Chapra, S., G. Pelletier, and H. Tao. 2007. QUAL2K: A Modeling Framework for Simulating River and Stream Water Quality (Version 2.07), Documentation and User's Manual, p. 103. Civil and Environmental Engineering Dept., Tufts University, Medford, MA.

Chapra, S. C. 1997. Surface Water-Quality Modeling. Waveland Press Inc.

Clifforde, I. T., B. Tomicic, and O. Mark. 1999. Integrated wastewater management - A European vision for the future. 8th International Conference on Urban Storm Drainage.

Cole, T. M., and S. A. Wells. 2008. CE-QUAL-W2: A two-Dimensional, laterally averaged, hydrodynamic and water quality model, Version 3.6 - User manual. U.S. Army Corps of Engineers.

Cooper, A. B. 1984. Activities of benthic nitrifiers in streams and their role in oxygen consumption. ***Microbial Ecology*** 10**:** 317-334.

Cox, B. A. 2003. A review of dissolved oxygen modelling techniques for lowland rivers. ***Science of the Total Environment*** 314-316**:** 303-334.

Craig, P. M. 2004. User's Manual for EFDC_Explorer: A Pre/Post Processor for the Environmental Fluid Dynamics Code. Dynamic Solutions, LLC.

DHI. 2007. ECO Lab Template - DHI Eutrophication model 1 - Including sediment and benthic vegetation. DHI.

DHI. 2008a. MIKE 11 - A modelling system for Rivers and Channels - User Guide. DHI.
DHI. 2008b. ECO Lab - Water quality WQ template, p. 28. DHI.
Duc, T. A., G. Vachaud, M. P. Bonnet, N. Prieur, V. D. Loi, and L. L. Anh. 2007. Experimental investigation and modelling approach of the impact of urban wastewater on a tropical river; a case study of the Nhue River, Hanoi, Viet Nam. ***Journal of Hydrology*** 334**:** 347-358.
Durchschlag, A., L. Härtel, P. Hartwig, M. Kaselow, D. T. Kollatsch, R. Otterpohl, and G. Schwentner. 1990. Gesamtemissionen aus Mischwasserentlastungen und Kläranlage - Erster Bericht über die Ergebnisse der Arbeitsgruppe "Gesamtemissionen" über die Effektivität und das Zusammenspiel von Misch- und Abwasserbehandlungsanlagen. ***Korrespondenz Abwasser*** 37**:** 860.
Dyck, S., and G. Peschke. 1995. Grundlagen der Hydrologie, 3. ed. Verlag für Bauwesen.
EPA. 2008. Integrated modelling for integrated environmental decision making. White paper. EPA100/R-08/010.
Erbe, V. 2004. Entwicklung eines integralen Modellansatzes zur immissionsorientierten Bewirtschaftung von Kanalnetz, Kläranlage und Gewässer. Bauhaus-Universität Weimar.
Even, S., G. Billen, N. Bacq, S. Théry, D. Ruelland, J. Garnier, P. Cugier, M. Poulin, S. Blanc, F. Lamy, and C. Paffoni. 2007a. New tools for modelling water quality of hydrosystems: An application in the Seine River basin in the frame of the Water Framework Directive. ***Science of the Total Environment*** 375**:** 274-291.
Even, S., J. M. Mouchel, P. Servais, N. Flipo, M. Poulin, S. Blanc, M. Chabanel, and C. Paffoni. 2007b. Modelling the impacts of Combined Sewer Overflows on the river Seine water quality. ***Science of the Total Environment*** 375**:** 140-151.
Fischer, H. B., E. J. List, R. C. Y. Koh, J. Imberger, and N. H. Brooks. 1979. Mixing in Inland and Coastal Waters. Academic Press.
Galland, J. C., N. Goutal, and J. M. Hervouet. 1991. TELEMAC: A new numerical model for solving shallow water equations. ***Advances in Water Resources*** 14**:** 138-148.
Garnier, J., G. Billen, and M. Coste. 1995. Seasonal succession of diatoms and Chlorophyceae in the drainage network of the Seine River: Observations and modeling. ***Limnology and Oceanography*** 40**:** 750-765.
Garnier, J., G. Billen, and L. Palfner. 1999. Understanding the oxygen budget and related ecological processes in the river Mosel: The RIVERSTRAHLER approach. ***Hydrobiologia*** 410**:** 151-166.
Gujer, W., M. Henze, M. Takashi, and M. van Loosdrecht. 1999. Activated sludge model no. 3. ***Water Science and Technology*** 39**:** 183-193.
Hamrick, J. M. 1992. A Three-Dimensional Environmental Fluid Dynamics Computer Code: Theoretical and Computational Aspects. , p. 63. The College of William and Mary, Virginia Institute of Marine Science.
Kalff, J. 2003. Limnology. Prentice Hall.
Katsev, S., G. Chaillou, B. Sundby, and A. Mucci. 2007. Effects of progressive oxygen depletion on sediment diagenesis and fluxes: A model for the lower St. Lawrence River Estuary. ***Limnology and Oceanography*** 52**:** 2555-2568.
Kirchesch, V., and A. Schöl. 1999. Das Gewassergütemodell QSIM - Ein instrument zur simulation und Prognose des Stoffhaushalts und der Planktondynamik von Fliessgewässern. ***Hydrologie und Wasserbewirtschaftung*** 43**:** 302-309.
Koch, G., M. Kühni, W. Gujer, and H. Siegrist. 2000. Calibration and validation of activated sludge model no. 3 for Swiss municipal wastewater. ***Water Research*** 34**:** 3580-3590.

Köhler, J., J. Gelbrecht, and M. Pusch. 2002. Die Spree - Zustand, Probleme, Entwicklungsmöglichkeiten. E. Schweizerbart'sche Verlagsbuchhandlung.
Kopmann, R., and M. Markofsky. 2000. Three-dimensional water quality modelling with TELEMAC-3D. ***Hydrological Processes*** 14**:** 2279-2292.
Kramer, G. R. 1974. Predicting reaeration coefficients for polluted estuary. ***J.ENVIRONM.ENGNG DIV.PROC.ASCE*** 100**:** 77-92.
Krejci, V., A. Frutiger, S. Kreikenbaum, and L. Rossi. 2004a. Gewässerbelastungen durch Abwasser aus Kanalisationen bei Regenwetter, p. 36. EAWAG/BUWAL.
Krejci, V., S. Kreikenbaum, and R. Fankhauser. 2004b. Projekt «STORM»: Abwassereinleitungen aus Kanalisationen bei Regenwetter - Akute Ammonikak- und hydraulische Beeinträchtigungen. ***GWA Gas, Wasser, Abwasser*** 9**:** 671-679.
Leszinski, M., F. Schumacher, K. Schröder, E. Pawlowsky-Reusing, and B. Heinzmann. 2006. ISM Teilstudie: Auswirkungen urbaner Nutzungen auf den Stoffhaushalt und die Biozönosen von Tieflandflüssen unter besonderer Berücksichtigung der Mischwasserentlastung, p. 138. Kompetenzzentrum Wasser Berlin gGmbH.
Leszinski, M., F. Schumacher, K. Schröder, E. Pawlowsky-Reusing, and B. Heinzmann. 2007. ISM Teilstudie: Immissionsorientierte Bewertung von Mischwasserentlastungen in Tieflandflüssen, p. 40. Kompetenzzentrum Wasser Berlin gGmbH.
Lindenschmidt, K. E. 2005. The effect of complexity on parameter sensitivity and model uncertainty in river water quality modelling. ***Ecological Modelling*** 190**:** 72-86.
McGinnis, D. F., and J. C. Little. 2002. Predicting diffused-bubble oxygen transfer rate using the discrete-bubble model. ***Water Research*** 36**:** 4627-4635.
Meier, W., C. Bonjour, A. Wüest, and P. Reichert. 2003. Modeling the effect of water diversion on the temperature of mountain streams. ***Journal of Environmental Engineering*** 129**:** 755-764.
Meirlaen, J. 2002. Immission based real-time-control of the integrated urban wastewater system. Ghent University.
Mieleitner, J., and P. Reichert. 2006. Analysis of the transferability of a biogeochemical lake model to lakes of different trophic state. ***Ecological Modelling*** 194**:** 49-61.
Möller, K., N. Kade, L. Havermeier, F. Paproth, J. Burgschweiger, E. Wittstock, M. Günther, K. Naumann, and J. Broll. 2008. Wasserversorgungskonzept für Berlin und für das von den BWB versorgte Umland (Entwicklung bis 2040). UBB Umweltvorhaben Dr. Klaus Möller GmbH.
Neitsch, S. L., J. G. Arnold, J. R. Kiniry, and J. R. Williams. 2001. Soil and Water Assessment Tool, User's manual, Grassland, soil and water research laboratory. Agricultural Research Service.
Norton, G. E., and A. Bradford. 2009. Comparison of two stream temperature models and evaluation of potential management alternatives for the Speed River, Southern Ontario. ***Journal of Environmental Management*** 90**:** 866-878.
O'Connor, D. J., and W. E. Dobbins. 1958. Mechanisms of reaeration in natural streams. ***Transactions - American Society of Civil Engineers*** 123**:** 641-666.
Odum, H. T. 1956. Primary production in flowing waters. ***Limnology and Oceanography*** 1**:** 102-117.
Omlin, M., P. Reichert, and R. Forster. 2001. Biogeochemical model of Lake Zürich: model equations and results. ***Ecological Modelling*** 141**:** 77–103.
Ostrowski, M. W., W. Wittpohl, and U. Wolf. 1989. Kombinierte Niedrigwasser- und Gütesimulation für die Volme. ***Vom Wasser*** 73**:** 227-239.
Pauer, J. J., and M. T. Auer. 2000. Nitrification in the water column and sediment of a hypereutrophic lake and adjoining river system. ***Water Research*** 34**:** 1247-1254.

Pauer, J. J., and M. T. Auer. 2009. Formulation and testing of a novel river nitrification model. ***Ecological Modelling*** 220**:** 857-866.
Qaisi, K. M., W. D. Constant, and L. J. Thibodeaux. 1997. Impact of barge traffic on stream reaeration: Laboratory experiments. ***Journal of Environmental Engineering*** 123**:** 716-719.
Rauch, W., H. Aalderink, P. Krebs, W. Schilling, and P. A. Vanrolleghem. 1998a. Requirements for integrated wastewater models - driven by receiving water objectives. ***Water Science & Technology*** 38**:** 97-104.
Rauch, W., M. Henze, L. Koncsos, P. Reichert, P. Shanahan, L. Somlyódy, and P. Vanrolleghem. 1998b. River water quality modelling: I. State of the art. ***Water Science and Technology*** 38**:** 237-244.
Rauch, W., J.-L. Bertrand-Krajewski, P. Krebs, O. Mark, W. Schilling, M. Schütze, and P. A. Vanrolleghem. 2002. Deterministic modelling of integrated urban drainage systems. ***Water Science & Technology*** 45**:** 81-94.
Redfield, A. C. 1958. The biological control of chemical factors in the environment. ***American Scientist*** 46**:** 205–221.
Reichert, P. 1994. Aquasim - A tool for simulation and data analysis of aquatic systems. ***Water Science and Technology*** 30**:** 21-30.
Reichert, P. 1998. AQUASIM 2.0 - User Manual Computer Program for the Identication and Simulation of Aquatic Systems, p. 219. Swiss Federal Institute for Environmental Science and Technology (EAWAG).
Reichert, P. 2001. River Water Quality Model no. 1 (RWQM1): Case study II. Oxygen and nitrogen conversion processes in the River Glatt (Switzerland). ***Water Science and Technology*** 43**:** 51-60.
Reichert, P., D. Borchardt, M. Henze, W. Rauch, P. Shanahan, L. Somlyódy, and P. Vanrolleghem. 2001. River Water Quality Model no. 1 (RWQM1): II. Biochemical process equations. ***Water Science and Technology*** 43**:** 11-30.
Riechel, M. 2009. Impact assessment of combined sewer overflows on the Berlin River Spree (in German). Technical University Berlin.
Rode, M., U. Suhr, and G. Wriedt. 2007. Multi-objective calibration of a river water quality model-Information content of calibration data. ***Ecological Modelling*** 204**:** 129-142.
Roelke, D. L., L. A. Cifuentes, and P. M. Eldridge. 1997. Nutrient and phytoplankton dynamics in a sewage-impacted gulf coast estuary: A field test of the PEG-model and Equilibrium Resource Competition theory. ***Estuaries*** 20**:** 725-742.
Schmid, M., M. De Batist, N. G. Granin, V. A. Kapitanov, D. F. McGinnis, I. B. Mizandrontsev, A. I. Obzhirov, and A. Wüest. 2007. Sources and sinks of methane in Lake Baikal: A synthesis of measurements and modeling. ***Limnology and Oceanography*** 52**:** 1824-1837.
Schöl, A., V. Kirchesch, T. Bergfeld, and D. Müller. 1999. Model-based analysis of oxygen budget and biological processes in the regulated rivers Moselle and Saar: Modelling the influence of benthic filter feeders on phytoplankton. ***Hydrobiologia*** 410**:** 167-176.
Schöl, A., V. Kirchesch, T. Bergfeld, F. Schöll, J. Borcherding, and D. Müller. 2002. Modelling the chlorophyll a content of the River Rhine interrelation between riverine algal production and population biomass of grazers, rotifers and the zebra mussel, Dreissena polymorpha. ***International Review of Hydrobiology*** 87**:** 295-317.
Schroeder, K., and E. Pawlowsky-Reusing. 2005. Current State And Development Of The Real-Time Control Of The Berlin Sewage System. ***Water Science & Technology*** 52**:** 181-187.

Schumacher, F., U. Gebauer, E. Pawlowsky-Reusing, I. Meier, K. Schroeder, M. Leszinski, and B. Heinzmann. 2007. Integrated Sewage Management - Water quality simulation of river Spree and its canals (reach Charlottenburg) under consideration of combined sewer overflows for a storm event in September 2005, p. 84. Kompetenzzentrum Wasser Berlin gGmbH.

Schütze, M., and J. Alex. 2004. Suitable integrated modelling - based on simplified models, p. 365-372. International Conference on Urban Drainage Modelling 2004.

Seidl, M., P. Servais, and J. M. Mouchel. 1998. Organic matter transport and degradation in the River Seine (France) after a combined sewer overflow. ***Water Research*** 32**:** 3569-3580.

Shanahan, P., M. Henze, L. Koncsos, W. Rauch, P. Reichert, L. Somlyódy, and P. Vanrolleghem. 1998. River water quality modelling: II. Problems of the art. ***Water Science and Technology*** 38**:** 245-252.

Shanahan, P., D. Borchardt, M. Henze, W. Rauch, P. Reichert, L. Somlyódy, and P. Vanrolleghem. 2001. River Water Quality Model no. 1 (RWQM1): I. Modelling approach. ***Water Science and Technology*** 43**:** 1-9.

Somlyódy, L., M. Henze, L. Koncsos, W. Rauch, P. Reichert, P. Shanahan, and P. Vanrolleghem. 1998. River water quality modelling: III. Future of the art. ***Water Science and Technology*** 38**:** 253-260.

Sonnenberg, H. 2009. Applicability of OpenMI and API for coupling models within MIA-CSO, p. 89. Kompetenzzentrum Berlin gGmbH.

Streeter, W. H., and E. B. Phelps. 1925. A study of the pollution and natural purification of the Ohio River. ***Public Health Bulletin*** 146.

Stumm, W., and J. J. Morgan. 1996. Aquatic Chemistry, 3 ed. Wiley Interscience.

Thibodeaux, L., M. Poulin, and S. Even. 1994. A model for enhanced aeration of streams by motor vessels with application to the Seine river. ***Journal of Hazardous Materials*** 37**:** 459-473.

Uhl, M. 2003. Beschaffenheit des Niederschlagsabflusses in Misch- und Trennsystem. Begleitband zu dem BWK-Merkblatt 3. Ablaitung von immissionsorientierten Anforderungen an Misch- und Niederschlagswassereinleitungen unter Berücksichtigung örtlicher Verhältnisse. BWK Bund der Ingenieure für Wasserwirtschaft, Abfallwirtschaft und Kulturbau e.V.

Vanhooren, H., J. Meirlaen, Y. Amerlinck, F. Claeys, H. Vangheluwe, and P. A. Vanrolleghem. 2003. WEST: Modelling biological wastewater treatment. ***Journal of Hydroinformatics*** 5**:** 27–50.

Vanrolleghem, P., D. Borchardt, M. Henze, W. Rauch, P. Reichert, P. Shanahan, and L. Somlyódy. 2001. River Water Quality Model no. 1 (RWQM1): III. Biochemical submodel selection. ***Water Science and Technology*** 43**:** 31-40.

Weiss, R. 1970. The solubility of nitrogen, oxygen, and argon in water and seawater. ***Deep-Sea Research*** 17**:** 721-735.

Wells, S. A. 2000. Hydrodynamic and water quality river basin modeling using CE-QUAL-W2 version 3. ***Environmental Studies*** 4**:** 195-204.

Wetzel, R. G. 2001. Limnology. Lake and River Ecosystems, 3rd Edition ed. Academic Press.

Wool, T. A., R. B. Ambrose, J. L. Martin, and E. A. Comer. 2001. The Water Analysis Simulation Program, User Documentation for Version 6.0, p. 267. USEPA Watershed and Water Quality Modeling Technical Support Center.

Wootton, J. T., M. S. Parker, and M. E. Power. 1996. Effects of disturbance on river food webs. ***Science*** 273**:** 1558-1561.

WSL. 2004. InfoWorks CS User Manual. Copyright 1997. Wallingford Software Ltd.

Appendix: Empirical equations for river reaeration

Coles and Wells (2008) provided an overview of reaeration depending on river flow speed (Table A.1) and on wind speed (Table A.2). Since the River Spree in Berlin is a slow-flowing river, both approaches need to be combined.

Table A.1: River reaeration equations from Coles and Wells (2008) (for cited references see therein):

#	Equation	Comments	Applicability	Reference
0	Either Eq 1, 2 or 4	K_a – evaluated based on applicability criteria of these equations		Covar (1976)
1	$K_a = \frac{K_L}{H} = \frac{(D_{O_2}U)^{1/2}}{H^{3/2}}$	D_{O2} = H_2O molecular diffusion, $m^2\ s^{-1}$ U = average velocity, $m\ s^{-1}$ H = average channel depth, m	depths between 1-30 *ft* and velocities between 0.5-1.6 *fps*	O'Connor and Dobbins (1958)
2	$K_a = \frac{K_L}{H} = \frac{11.6U}{H^{1.67}}$	U, $ft\ s^{-1}$ H, ft K_a, day^{-1}	depths between 2-11 *ft* and velocities between 1.8-5 *fps*	Churchill, Elmore and Buckingham (1962)
3	$K_a = 0.88US\ for 10 < Q < 300\ cfs$ $K_a = 1.8US\ \ for\ \ 1 < Q < 10\ cfs$	S, $ft\ mile^{-1}$ U, $ft\ s^{-1}$ K_a, day^{-1}	suggested for use when Q < 10cfs	Tsivoglou and Wallace (1972)
4	$K_a = \frac{K_L}{H} = \frac{21.6U^{0.67}}{H^{1.85}}$	U, $ft\ s^{-1}$ H, ft	depths between 0.4-2.4 ft and velocities between 0.1-1.8 fps	Owens et al. (1964)
5	$K_a = \frac{K_L}{H} = \frac{25u^*}{H}\left(1 + F^{0.5}\right)$	u^* = shear velocity, $(HSg)^{0.5}$ S = slope of energy grade line F = Froude number, $U/(gH)^{0.5}$		Thackston and Krenkel (1966)
6	$K_a = \frac{K_L}{H} = \frac{7.62U}{H^{1.33}}$	U, $ft\ s^{-1}$ H, ft		Langbien and Durum (1967)
7	$K_a = 517(US)^{0.524}Q^{-0.242}\ for\ \ Q < 0.556$ $K_a = 596(US)^{0.528}Q^{-0.136}\ for\ \ Q > 0.556$	U, $m\ s^{-1}$ S, $m\ m^{-1}$ Q, $m^3\ s^{-1}$ K_a, day^{-1}	for pool and riffle streams	Melching and Flores (1999)
8	$K_a = 88(US)^{0.313}D^{-0.353}\ for Q < 0.556$ $K_a = 142(US)^{0.333}D^{-0.66}W^{-0.243}$ $for Q > 0.556$	U, $m\ s^{-1}$ S, $m\ m^{-1}$ W = stream top width, m D = average depth, m K_a, day^{-1}	for channel-control streams	Melching and Flores (1999)
9	w/ channel slope - $K_a = C_1U^{C_2}H^{C_3}S^{C_4}$ w/o channel slope - $K_a = C_1U^{C_2}H^{C_3}$	U, $m\ s^{-1}$ H, m S, non-dimensional K_a, day^{-1} C^1, C_2, C_3, C_4 = user defined parameters	User defined relationship	
10	$K_a = \frac{K_L}{H} = \frac{5.0u^*}{H}\left(1 + 9F^{0.25}\right)$	u^* = shear velocity, $(HSg)^{0.5}$ S = slope of energy grade line F = Froude number, $U/(gH)^{0.5}$ K_a, day^{-1}		Thackston and Dawson (2001)

Table A.2: Lake reaeration equations from Coles and Wells (2008) (for cited references see therein):

#	Equation	Comments	Reference
1	$K_a = \frac{K_L}{H} = \frac{0.864W}{H}$	W, $m\ s^{-1}$ at 10 m H, m K_L, $m\ day^{-1}$	Broecker et al (1978)
2	$K_a = \frac{K_L}{H} = \frac{\alpha W^{\beta}}{H}$	$\alpha = 0.2$, $\beta = 1$ for $W < 3.5\ m\ s^{-1}$ $a = 0.057$, $\beta = 2$ for $W > 3.5\ m\ s^{-1}$ where W is a daily average wind speed	Gelda et al (1996)
3	$K_a = \frac{K_L}{H} = \frac{0.728W^{0.5} - 0.317W + 0.}{H}$	W, $m\ s^{-1}$ at 10 m K_L, $m\ day^{-1}$	Banks and Herrera (1977)
4	$K_a = \frac{K_L}{H} = \frac{0.0986W^{1.64}}{H}$ [at 20°C] or $K_a = \frac{K_L}{H} = \frac{0.0986W^{1.64}}{H}\left(\frac{600}{Sc}\right)^{0.5}$	The latter equation was the original equation used where W is measured at 10 m and Sc is the Schmidt number Sc=(ν/D)=13750[0.10656exp(-.0627T)+.00495] T = temperature, °C ν=kinematic viscosity D=diffusivity	Wanninkhof et al. (1991)
5	$K_a = \frac{K_L}{H} = \frac{\frac{D_{o2}}{(200 - 60W^{0.5})10^{-6}}}{H}$	D_{O2} = oxygen molecular diffusivity, $m^2\ s^{-1}$ W, $m\ s^{-1}$ K_L, $m\ s^{-1}$	Chen, Kanwisher (1963)
6	$K_a = \frac{K_L}{H} = \frac{0.5 + 0.05W^2}{H}$		Cole and Buchak (1995)
7	$K_a = \frac{K_L}{H} = \frac{0.362\sqrt{W}}{H}$ $W < 5.5m/$ $K_a = \frac{K_L}{H} = \frac{0.0277W^2}{H}$ $W > 5.5m/$		Banks (1975)
8	$K_a = \frac{K_L}{H} = \frac{0.64 + 0.128W^2}{H}$	Recommended form for WQRSS reservoir model	Smith (1978)
9	$K_a = \frac{K_L}{H} = \frac{0.156W^{0.63}}{H}$ $W \le 4.1m$ $K_a = \frac{K_L}{H} = \frac{0.0269W^{1.9}}{H}$ $W > 4.1m$		Liss (1973)
10	$K_a = \frac{K_L}{H} = \frac{0.0276W^2}{H}$		Downing and Truesdale (1955)
11	$K_a = \frac{K_L}{H} = \frac{0.0432W^2}{H}$		Kanwisher (1963)
12	$K_a = \frac{K_L}{H} = \frac{0.319W}{H}$		Yu et al (1977)
13	$K_a = \frac{K_L}{H} = \frac{0.398}{H}$ $W < 1.6$ $K_a = \frac{K_L}{H} = \frac{0.155W^2}{H}$ $W \ge 1.6$	W = wind speed, $m\ s^{-1}$	Weiler (1974)
14	$K_a = \frac{K_L}{H} = \frac{C_1 + C_2W^{C_3}}{H}$	User defined relationship where: W, $m\ s^{-1}$ at 10 m K_a, day^{-1} C_1, C_2, C_3 are user defined	